SYLVANIA

Symphonic

SERVICE MANUAL

13″ COLOR TV/DVD

6513DF/SC513DF

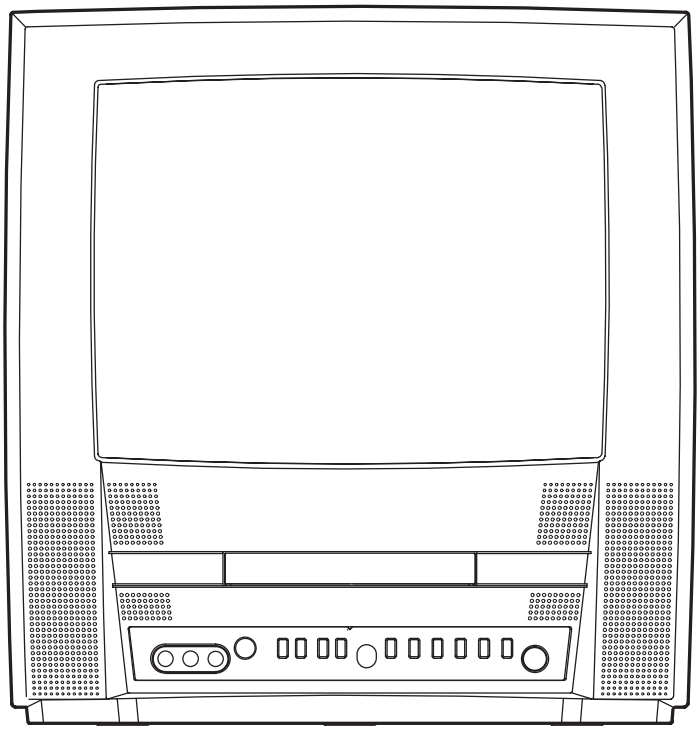

IMPORTANT SAFETY NOTICE

Proper service and repair is important to the safe, reliable operation of all Funai Equipment. The service procedures recommended by Funai and described in this service manual are effective methods of performing service operations. Some of these service special tools should be used when and as recommended.

It is important to note that this service manual contains various CAUTIONS and NOTICES which should be carefully read in order to minimize the risk of personal injury to service personnel. The possibility exists that improper service methods may damage the equipment. It also is important to understand that these CAUTIONS and NOTICES ARE NOT EXHAUSTIVE. Funai could not possibly know, evaluate and advice the service trade of all conceivable ways in which service might be done or of the possible hazardous consequences of each way. Consequently, Funai has not undertaken any such broad evaluation. Accordingly, a servicer who uses a service procedure or tool which is not recommended by Funai must first use all precautions thoroughly so that neither his safety nor the safe operation of the equipment will be jeopardized by the service method selected.

Manufactured under license from Dolby Laboratories.
“Dolby” and the double-D symbol are trademarks of Dolby Laboratories.

TABLE OF CONTENTS

Specifications 1-1-1
Laser Beam Safety Precautions 1-2-1
Important Safety Precautions 1-3-1
Standard Notes for Servicing 1-4-1
Cabinet Disassembly Instructions 1-5-1
Electrical Adjustment Instructions 1-6-1
How to Initialize the TV/DVD 1-7-1
Firmware Renewal Mode 1-8-1
Block Diagrams 1-9-1
Schematic Diagrams / CBA's and Test Points 1-10-1
Waveforms 1-11-1
Wiring Diagram 1-12-1
System Control Timing Charts 1-13-1
IC Pin Function Descriptions 1-14-1
Lead Identifications 1-15-1
Exploded Views 1-16-1
Mechanical Parts List 1-17-1
Electrical Parts List 1-18-1

SPECIFICATIONS

< TV Section >

✳Test input terminal
<Except Tuner>----------Video input (1Vp-p)
Audio input (-10dB)
<Tuner>----------Ant. input (80dBμV) Video: 87.5%
Audio: 25kHz dev (1kHz Sin)

<DEFLECTION>

Description	Condition	Unit	Nominal	Limit
1. Over Scan	—	%	90	—
2. Linearity	Horizontal	%	—	±15
	Vertical	%	—	±10
3. High Voltage	—	kV	22	—

<VIDEO & CHROMA>

Description	Condition	Unit	Nominal	Limit
1. Misconvergence	Center	m/m	—	0.4
	Corner	m/m	—	2.1
	Side	m/m	—	1.5
2. Tint Control Range	—	deg	±30	—
3. Contrast Control Range	—	dB	12	2
4. Brightness (100% White Full Field)	Contrast: Max	ft-L	55	40
5. Color Temperature	—	K	9200	—

<TUNER>

Description	Condition	Unit	Nominal	Limit
1. Video S/N (80dBμV, TV4ch)	—	dB	45	40
2. Audio S/N (W/LPF)	—	dB	45	40
3. Audio Output Power at Speaker	—	W	1	0.8

Note: Nominal specifications represent the design specifications. All units should be able to approximate these. Some will exceed and some may drop slightly below these specifications. Limit specifications represent the absolute worst condition that still might be considered acceptable. In no case should a unit fail to meet limit specifications.

<DVD Section>

ITEM	CONDITIONS	UNIT	NOMINAL	LIMIT
1. Coaxial Digital Out	75 ohm load	mVpp	500	± 100

NOTES:

1. All Items are measured without pre-emphasis unless otherwise specified.
2. Power supply : AC120 V 60 Hz
3. Ambient temperature: +25 °C

LASER BEAM SAFETY PRECAUTIONS

This DVD player uses a pickup that emits a laser beam.

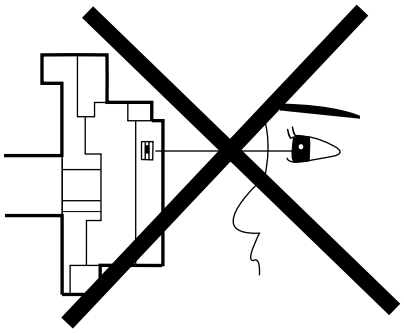

Do not look directly at the laser beam coming from the pickup or allow it to strike against your skin.

The laser beam is emitted from the location shown in the figure. When checking the laser diode, be sure to keep your eyes at least 30 cm away from the pickup lens when the diode is turned on. Do not look directly at the laser beam.

CAUTION: Use of controls and adjustments, or doing procedures other than those specified herein, may result in hazardous radiation exposure.

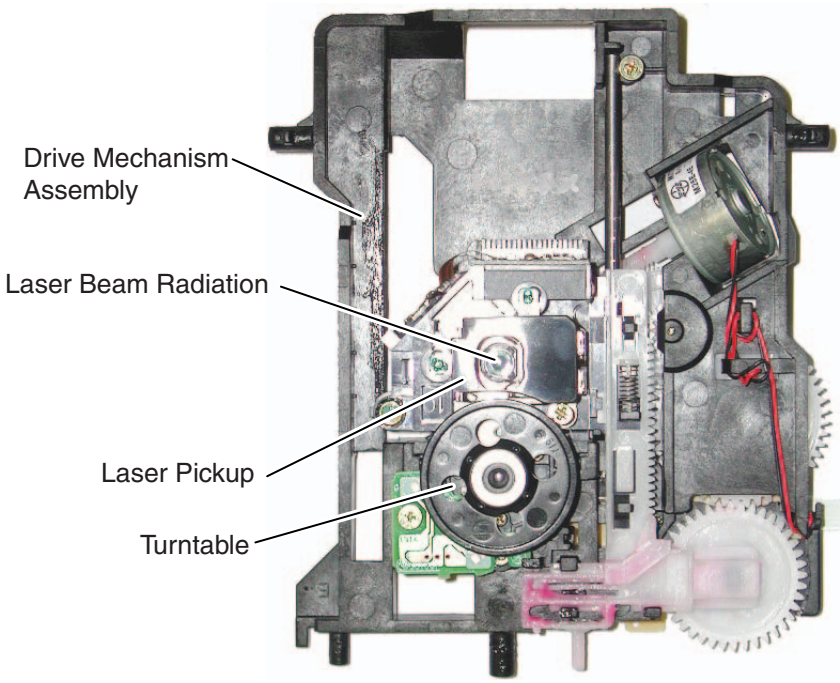

CAUTION
LASER RADIATION WHEN OPEN. DO NOT STARE INTO BEAM.

Location: Top of DVD mechanism.

IMPORTANT SAFETY PRECAUTIONS

Prior to shipment from the factory, our products are strictly inspected for recognized product safety and electrical codes of the countries in which they are to be sold. However, in order to maintain such compliance, it is equally important to implement the following precautions when a set is being serviced.

Safety Precautions for TV Circuit

1. **Before returning an instrument to the customer,** always make a safety check of the entire instrument, including, but not limited to, the following items:
   - **a.** Be sure that no built-in protective devices are defective and have been defeated during servicing. (1) Protective shields are provided on this chassis to protect both the technician and the customer. Correctly replace all missing protective shields, including any removed for servicing convenience. (2) When reinstalling the chassis and/or other assembly in the cabinet, be sure to put back in place all protective devices, including but not limited to, nonmetallic control knobs, insulating fishpapers, adjustment and compartment covers/shields, and isolation resistor/capacitor networks. **Do not operate this instrument or permit it to be operated without all protective devices correctly installed and functioning. Servicers who defeat safety features or fail to perform safety checks may be liable for any resulting damage.**
   - **b.** Be sure that there are no cabinet openings through which an adult or child might be able to insert their fingers and contact a hazardous voltage. Such openings include, but are not limited to, (1) spacing between the picture tube and the cabinet mask, (2) excessively wide cabinet ventilation slots, and (3) an improperly fitted and/or incorrectly secured cabinet back cover.
   - **c. Antenna Cold Check -** With the instrument AC plug removed from any AC source, connect an electrical jumper across the two AC plug prongs. Place the instrument AC switch in the on position. Connect one lead of an ohmmeter to the AC plug prongs tied together and touch the other ohmmeter lead in turn to each tuner antenna input exposed terminal screw and, if applicable, to the coaxial connector. If the measured resistance is less than 1.0 megohm or greater than 5.2 megohm, an abnormality exists that must be corrected before the instrument is returned to the customer. Repeat this test with the instrument AC switch in the off position.
   - **d. Leakage Current Hot Check -** With the instrument completely reassembled, plug the AC line cord directly into a 120 V AC outlet. (Do not use an isolation transformer during this test.) Use a leakage current tester or a metering system that complies with American National Standards Institute (ANSI) C101.1 Leakage Current for Appliances and Underwriters Laboratories (UL) 1410, (50.7). With the instrument AC switch first in the on position and then in the off position, measure from a known earth ground (metal water pipe, conduit, etc.) to all exposed metal parts of the instrument (antennas, handle brackets, metal cabinet, screw heads, metallic overlays, control shafts, etc.), especially any exposed metal parts that offer an electrical return path to the chassis. Any current measured must not exceed 0.5 milli-ampere. Reverse the instrument power cord plug in the outlet and repeat the test.

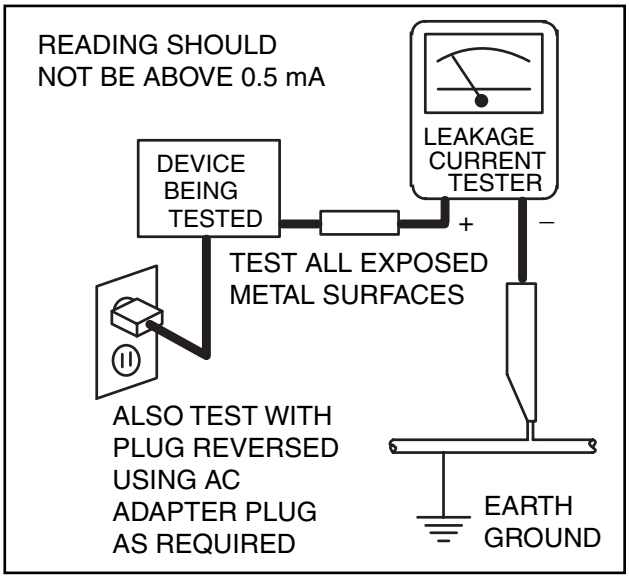

ANY MEASUREMENTS NOT WITHIN THE LIMITS SPECIFIED HEREIN INDICATE A POTENTIAL SHOCK HAZARD THAT MUST BE ELIMINATED BEFORE RETURNING THE INSTRUMENT TO THE CUSTOMER OR BEFORE CONNECTING THE ANTENNA OR ACCESSORIES.

   - **e. X-Radiation and High Voltage Limits -** Because the picture tube is the primary potential source of X-radiation in solid-state TV receivers, it is specially constructed to prohibit X-radiation emissions. For continued X-radiation protection, the replacement picture tube must be the same type as the original.

Also, because the picture tube shields and mounting hardware perform an X-radiation protection function, they must be correctly in place. High voltage must be measured each time servicing is performed that involves B+, horizontal deflection or high voltage. Correct operation of the X-radiation protection circuits also must be reconfirmed each time they are serviced. (X-radiation protection circuits also may be called “horizontal disable” or “hold down.”) Read and apply the high voltage limits and, if the chassis is so equipped, the X-radiation protection circuit specifications given on instrument labels and in the Product Safety & X-Radiation Warning note on the service data chassis schematic. High voltage is maintained within specified limits by close tolerance safety-related components/ adjustments in the high-voltage circuit. If high voltage exceeds specified limits, check each component specified on the chassis schematic and take corrective action.

2. Read and comply with all caution and safety-related notes on or inside the receiver cabinet, on the receiver chassis, or on the picture tube.
3. **Design Alteration Warning -** Do not alter or add to the mechanical or electrical design of this TV receiver. Design alterations and additions, including, but not limited to circuit modifications and the addition of items such as auxiliary audio and/or video output connections, might alter the safety characteristics of this receiver and create a hazard to the user. Any design alterations or additions will void the manufacturer's warranty and may make you, the servicer, responsible for personal injury or property damage resulting therefrom.
4. **Picture Tube Implosion Protection Warning -** The picture tube in this receiver employs integral implosion protection. For continued implosion protection, replace the picture tube only with one of the same type number. Do not remove, install, or otherwise handle the picture tube in any manner without first putting on shatterproof goggles equipped with side shields. People not so equipped must be kept safely away while picture tubes are handled. Keep the picture tube away from your body. Do not handle the picture tube by its neck. Some “in-line” picture tubes are equipped with a permanently attached deflection yoke; because of potential hazard, do not try to remove such “permanently attached” yokes from the picture tube.
5. **Hot Chassis Warning -**
   a. Some TV receiver chassis are electrically connected directly to one conductor of the AC power cord and maybe safety-serviced without an isolation transformer only if the AC power plug is inserted so that the chassis is connected to the ground side of the AC power source. To confirm that the AC power plug is inserted correctly, with an AC voltmeter, measure between the chassis and a known earth ground. If a voltage reading in excess of 1.0V is obtained, remove and reinsert the AC power plug in the opposite polarity and again measure the voltage potential between the chassis and a known earth ground.
   b. Some TV receiver chassis normally have 85V AC(RMS) between chassis and earth ground regardless of the AC plug polarity. This chassis can be safety-serviced only with an isolation transformer inserted in the power line between the receiver and the AC power source, for both personnel and test equipment protection.
   c. Some TV receiver chassis have a secondary ground system in addition to the main chassis ground. This secondary ground system is not isolated from the AC power line. The two ground systems are electrically separated by insulation material that must not be defeated or altered.
6. Observe original lead dress. Take extra care to assure correct lead dress in the following areas: a. near sharp edges, b. near thermally hot parts-be sure that leads and components do not touch thermally hot parts, c. the AC supply, d. high voltage, and, e. antenna wiring. Always inspect in all areas for pinched, out of place, or frayed wiring. Check AC power cord for damage.
7. Components, parts, and/or wiring that appear to have overheated or are otherwise damaged should be replaced with components, parts, or wiring that meet original specifications. Additionally, determine the cause of overheating and/or damage and, if necessary, take corrective action to remove any potential safety hazard.
8. **Product Safety Notice -** Some electrical and mechanical parts have special safety-related characteristics which are often not evident from visual inspection, nor can the protection they give necessarily be obtained by replacing them with components rated for higher voltage, wattage, etc.. Parts that have special safety characteristics are identified by a ⚠ on schematics and in parts lists. Use of a substitute replacement that does not have the same safety characteristics as the recommended replacement part might create shock, fire, and/or other hazards. The product's safety is under review continuously and new instructions are issued whenever appropriate. Prior to shipment from the factory, our products are strictly inspected to confirm they comply with the recognized product safety and electrical codes

of the countries in which they are to be sold. However, in order to maintain such compliance, it is equally important to implement the following precautions when a set is being serviced.

Precautions during Servicing

A. Parts identified by the ⚠ symbol are critical for safety.
Replace only with part number specified.

B. In addition to safety, other parts and assemblies are specified for conformance with regulations applying to spurious radiation. These must also be replaced only with specified replacements.
Examples: RF converters, RF cables, noise blocking capacitors, and noise blocking filters, etc.

C. Use specified internal wiring. Note especially:

1) Wires covered with PVC tubing
2) Double insulated wires
3) High voltage leads

D. Use specified insulating materials for hazardous live parts. Note especially:

1) Insulation Tape
2) PVC tubing
3) Spacers
4) Insulators for transistors.

E. When replacing AC primary side components (transformers, power cord, etc.), wrap ends of wires securely about the terminals before soldering.

F. Observe that the wires do not contact heat producing parts (heat sinks, oxide metal film resistors, fusible resistors, etc.)

G. Check that replaced wires do not contact sharp edged or pointed parts.

H. When a power cord has been replaced, check that 5~6 kg of force in any direction will not loosen it.

I. Also check areas surrounding repaired locations.

J. Be careful that foreign objects (screws, solder droplets, etc.) do not remain inside the set.

K. Crimp type wire connector
When replacing the power transformer in sets where the connections between the power cord and power transformer primary lead wires are performed using crimp type connectors, in order to prevent shock hazards, perform carefully and precisely the following steps.
Replacement procedure

1) Remove the old connector by cutting the wires at a point close to the connector.
Important: Do not re-use a connector (discard it).
2) Strip about 15 mm of the insulation from the ends of the wires. If the wires are stranded, twist the strands to avoid frayed conductors.
3) Align the lengths of the wires to be connected. Insert the wires fully into the connector.
4) Use the crimping tool to crimp the metal sleeve at the center position. Be sure to crimp fully to the complete closure of the tool.

L. When connecting or disconnecting the DVD/VCR connectors, first, disconnect the AC plug from the AC supply socket.

Safety Check after Servicing

Examine the area surrounding the repaired location for damage or deterioration. Observe that screws, parts and wires have been returned to original positions. Afterwards, perform the following tests and confirm the specified values in order to verify compliance with safety standards.

1. Clearance Distance

When replacing primary circuit components, confirm specified clearance distance (d) and (d') between soldered terminals, and between terminals and surrounding metallic parts. (See Fig. 1)

Table 1: Ratings for selected area

AC Line Voltage	Region	Clearance Distance (d), (d')
110 to 130 V	U.S.A. or Canada	≥ 3.2 mm (0.126 inches)

Note: This table is unofficial and for reference only. Be sure to confirm the precise values.

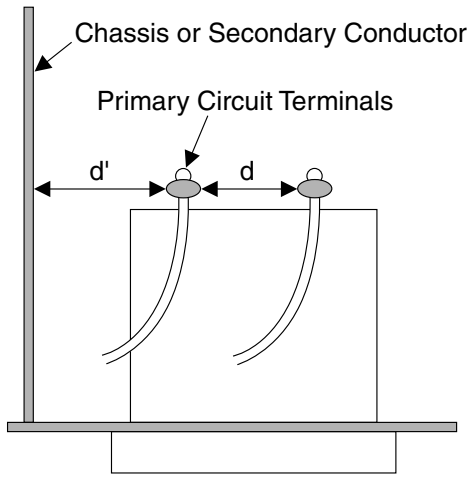

Fig. 1

2. Leakage Current Test

Confirm the specified (or lower) leakage current between B (earth ground, power cord plug prongs) and externally exposed accessible parts (RF terminals, antenna terminals, video and audio input and output terminals, microphone jacks, earphone jacks, etc.).

Measuring Method: (Power ON)

Insert load Z between B (earth ground, power cord plug prongs) and exposed accessible parts. Use an AC voltmeter to measure across both terminals of load Z. See Fig. 2 and following table.

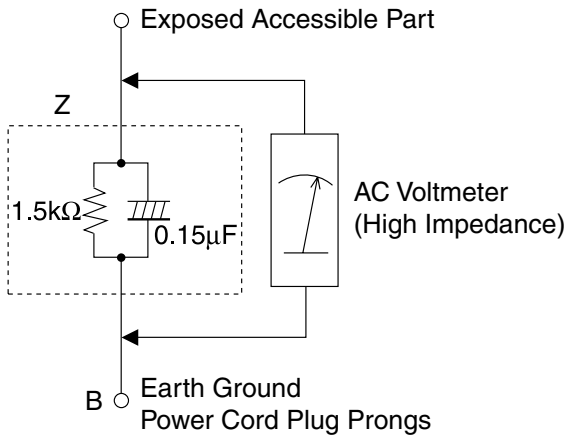

Fig. 2

Table 2: Leakage current ratings for selected areas

AC Line Voltage	Region	Load Z	Leakage Current (i)	Earth Ground (B) to:
110 to 130 V	U.S.A. or Canada	0.15 μF CAP. & 1.5 kΩ RES. Connected in parallel	i ≤ 0.5 mA rms	Exposed accessible parts

Note: This table is unofficial and for reference only. Be sure to confirm the precise values.

STANDARD NOTES FOR SERVICING

Circuit Board Indications

1. The output pin of the 3 pin Regulator ICs is indicated as shown.

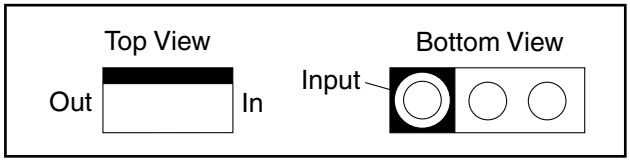

2. For other ICs, pin 1 and every fifth pin are indicated as shown.

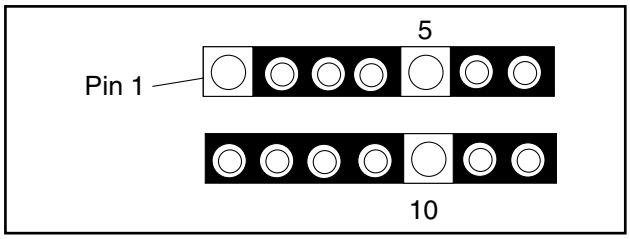

3. The 1st pin of every male connector is indicated as shown.

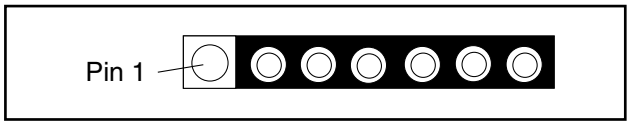

Instructions for Connectors

1. When you connect or disconnect the FFC (Flexible Foil Connector) cable, be sure to first disconnect the AC cord.
2. FFC (Flexible Foil Connector) cable should be inserted parallel into the connector, not at an angle.

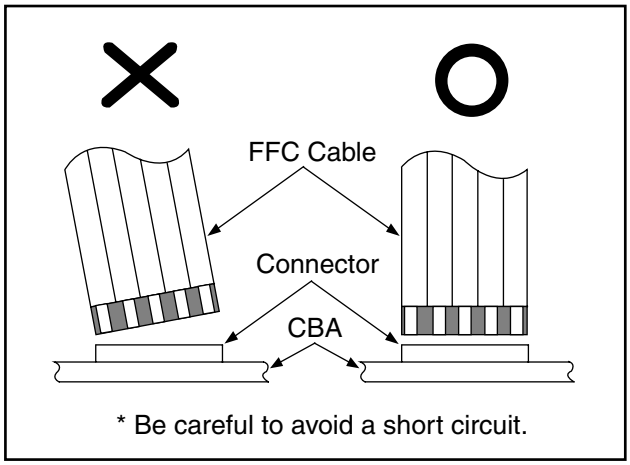

* Be careful to avoid a short circuit.

Pb (Lead) Free Solder

Pb free mark will be found on PCBs which use Pb free solder. (Refer to figure.) For PCBs with Pb free mark, be sure to use Pb free solder. For PCBs without Pb free mark, use standard solder.

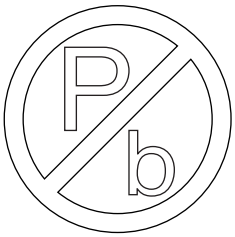

Pb free mark

How to Remove / Install Flat Pack-IC

1. Removal

With Hot-Air Flat Pack-IC Desoldering Machine:

1. Prepare the hot-air flat pack-IC desoldering machine, then apply hot air to the Flat Pack-IC (about 5 to 6 seconds). (Fig. S-1-1)

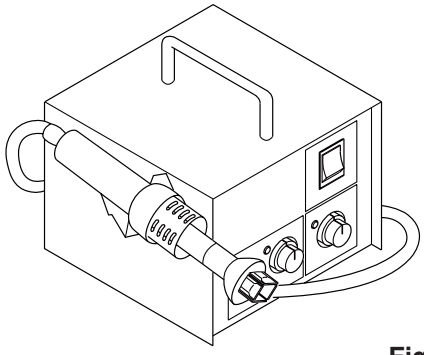

Fig. S-1-1

2. Remove the flat pack-IC with tweezers while applying the hot air.
3. Bottom of the flat pack-IC is fixed with glue to the CBA; when removing entire flat pack-IC, first apply soldering iron to center of the flat pack-IC and heat up. Then remove (glue will be melted). (Fig. S-1-6)
4. Release the flat pack-IC from the CBA using tweezers. (Fig. S-1-6)

CAUTION:

1. The Flat Pack-IC shape may differ by models. Use an appropriate hot-air flat pack-IC desoldering machine, whose shape matches that of the Flat Pack-IC.
2. Do not supply hot air to the chip parts around the flat pack-IC for over 6 seconds because damage to the chip parts may occur. Put masking tape

around the flat pack-IC to protect other parts from damage. (Fig. S-1-2)

3. The flat pack-IC on the CBA is affixed with glue, so be careful not to break or damage the foil of each pin or the solder lands under the IC when removing it.

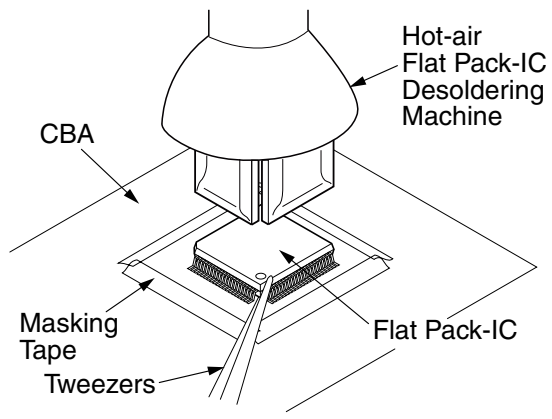

Fig. S-1-2

With Soldering Iron:

1. Using desoldering braid, remove the solder from all pins of the flat pack-IC. When you use solder flux which is applied to all pins of the flat pack-IC, you can remove it easily. (Fig. S-1-3)

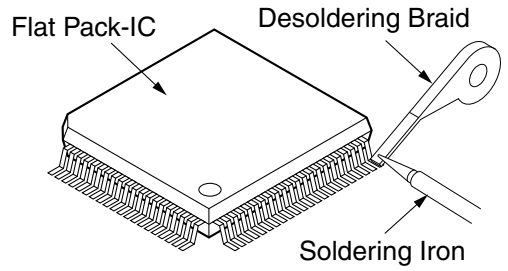

Fig. S-1-3

2. Lift each lead of the flat pack-IC upward one by one, using a sharp pin or wire to which solder will not adhere (iron wire). When heating the pins, use a fine tip soldering iron or a hot air desoldering machine. (Fig. S-1-4)

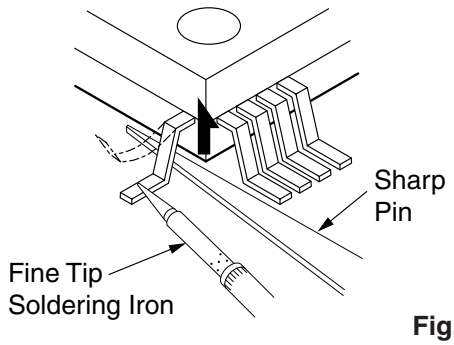

Fig. S-1-4

3. Bottom of the flat pack-IC is fixed with glue to the CBA; when removing entire flat pack-IC, first apply soldering iron to center of the flat pack-IC and heat up. Then remove (glue will be melted). (Fig. S-1-6)
4. Release the flat pack-IC from the CBA using tweezers. (Fig. S-1-6)

With Iron Wire:

1. Using desoldering braid, remove the solder from all pins of the flat pack-IC. When you use solder flux which is applied to all pins of the flat pack-IC, you can remove it easily. (Fig. S-1-3)
2. Affix the wire to a workbench or solid mounting point, as shown in Fig. S-1-5.
3. While heating the pins using a fine tip soldering iron or hot air blower, pull up the wire as the solder melts so as to lift the IC leads from the CBA contact pads as shown in Fig. S-1-5.
4. Bottom of the flat pack-IC is fixed with glue to the CBA; when removing entire flat pack-IC, first apply soldering iron to center of the flat pack-IC and heat up. Then remove (glue will be melted). (Fig. S-1-6)
5. Release the flat pack-IC from the CBA using tweezers. (Fig. S-1-6)

Note: When using a soldering iron, care must be taken to ensure that the flat pack-IC is not being held by glue. When the flat pack-IC is removed from the CBA, handle it gently because it may be damaged if force is applied.

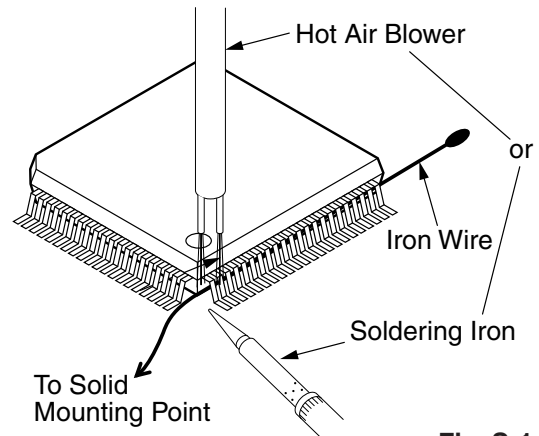

Fig. S-1-5

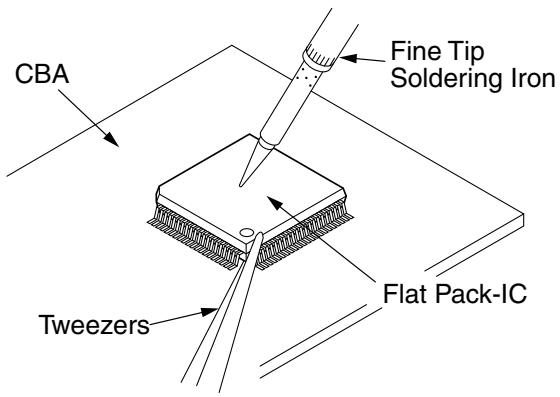

Fig. S-1-6

2. Installation

1. Using desoldering braid, remove the solder from the foil of each pin of the flat pack-IC on the CBA so you can install a replacement flat pack-IC more easily.
2. The "●" mark on the flat pack-IC indicates pin 1. (See Fig. S-1-7.) Be sure this mark matches the 1 on the PCB when positioning for installation. Then presolder the four corners of the flat pack-IC. (See Fig. S-1-8.)
3. Solder all pins of the flat pack-IC. Be sure that none of the pins have solder bridges.

Example :

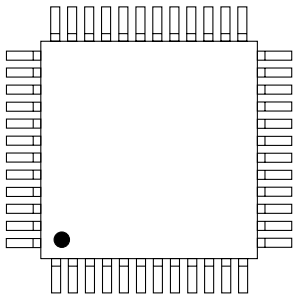

Pin 1 of the Flat Pack-IC
is indicated by a " ● " mark.

Fig. S-1-7

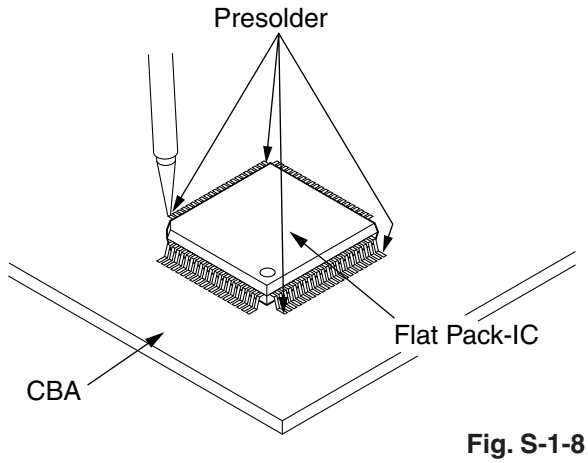

Fig. S-1-8

Instructions for Handling Semi-conductors

Electrostatic breakdown of the semi-conductors may occur due to a potential difference caused by electrostatic charge during unpacking or repair work.

1. Ground for Human Body

Be sure to wear a grounding band (1 MΩ) that is properly grounded to remove any static electricity that may be charged on the body.

2. Ground for Workbench

Be sure to place a conductive sheet or copper plate with proper grounding (1 MΩ) on the workbench or other surface, where the semi-conductors are to be placed. Because the static electricity charge on clothing will not escape through the body grounding band, be careful to avoid contacting semi-conductors with your clothing.

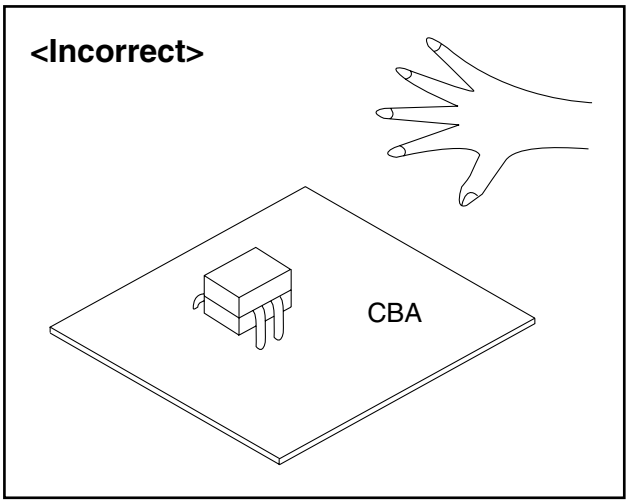

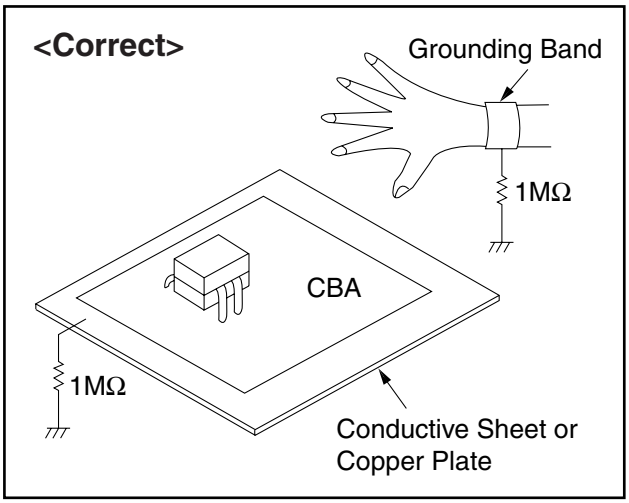

CABINET DISASSEMBLY INSTRUCTIONS

1. Disassembly Flowchart

This flowchart indicates the disassembly steps for the cabinet parts, and the CBA in order to gain access to item(s) to be serviced. When reassembling, follow the steps in reverse order. Bend, route and dress the cables as they were.

Caution !

When removing the CRT, be sure to discharge the Anode Lead of the CRT with the CRT Ground Wire before removing the Anode Cap.

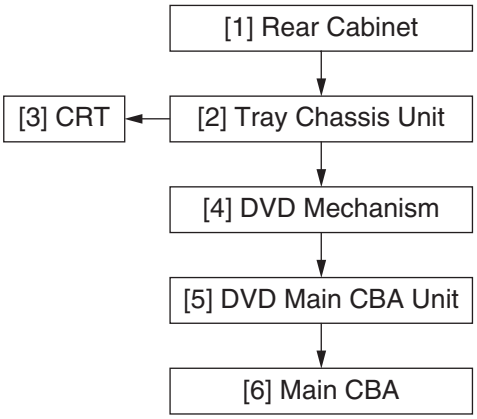

2. Disassembly Method

ID/ LOC. No.	PART	REMOVAL		
		Fig. No.	REMOVE/ *UNHOOK/UNLOCK/ RELEASE/UNPLUG/ DESOLDER	Note
[1]	Rear Cabinet	1	4(S-1), (S-2), 2(S-3)	-
[2]	Tray Chassis Unit	2,3, 5	Anode Cap, CN1801, CN1802, CN2505, CRT CBA, CN1601, CN1571	1
[3]	CRT	2	4(S-4)	-
[4]	DVD Mechanism	3,4, 5	4(S-5), 3(S-6), Loader Cover, CN201, CN9301	2-1 2-2 2-3 2-4 3
[5]	DVD Main CBA Unit	3,5	(S-7), Loader PCB Holder, CN1 (CN2), CN3 (CN4)	-
[6]	Main CBA	3	4(S-8)	-
↓ (1)	↓ (2)	↓ (3)	↓ (4)	↓ (5)

(1): Order of steps in Procedure. When reassembling, follow the steps in reverse order.These numbers are also used as the Identification (location) No. of parts in Figures.

(2): Parts to be removed or installed.

(3): Fig. No. showing Procedure of Part Location.

(4): Identification of part to be removed, unhooked, unlocked, released, unplugged, unclamped, or desoldered.
S=Screw, P=Spring, L=Locking Tab, CN=Connector, *=Unhook, Unlock, Release, Unplug, or Desolder
2(S-2) = two Screws (S-2)

(5): Refer to the following "Reference Notes in the Table."

Reference Notes in the Table

Caution !

When removing the CRT, be sure to discharge the Anode Lead of the CRT with the CRT Ground Wire before removing the Anode Cap.

CAUTION 1: Discharge the Anode Lead of the CRT with the CRT Ground Wire before removing the Anode Cap.

1. Disconnect the following: Anode Cap, CN1801, CN1802, CN2505, CRT CBA, CN1601 and CN1571.
   Then remove Tray Chassis Unit.

CAUTION 2: Electrostatic breakdown of the laser diode in the optical system block may occur as a potential difference caused by electrostatic charge accumulated on cloth, human body etc., during unpacking or repair work.

To avoid damage of pickup follow next procedures.

2-1. Disconnect Connector (CN9301) on the Main CBA Unit.

2-2. Remove four Screws (S-5) and lift the DVD Mechanism up. (Fig. 3)

2-3. Short the three short lands of FPC cable with solder before removing the FFC cable (CN201) from it. If you disconnect the FFC cable (CN201), the laser diode of pickup will be destroyed. (Fig. 4)

2-4. Remove three Screws (S-6) and Loader Cover.

CAUTION 3: When reassembling, confirm the FFC cable (CN201) is connected completely. Then remove the solder from the three short lands of FPC cable. (Fig. 4)

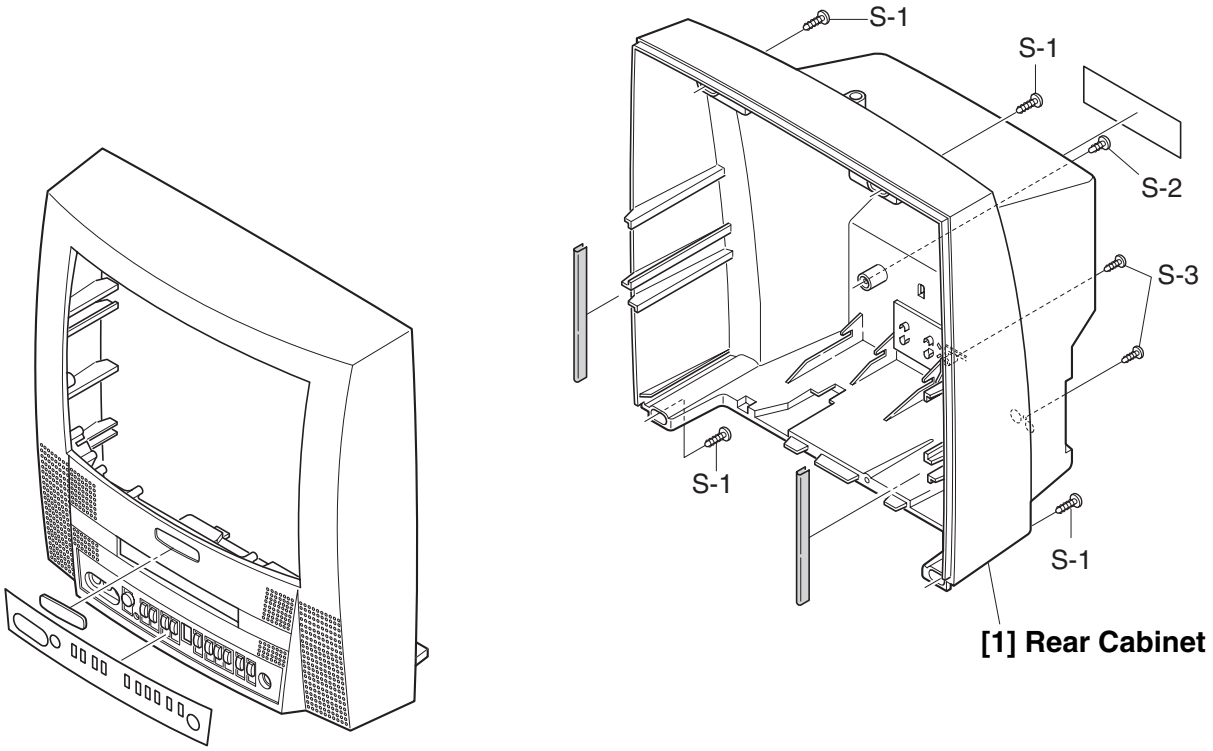
S-1
S-1
S-2
S-3
S-1
S-1
[1] Rear Cabinet

Fig. 1

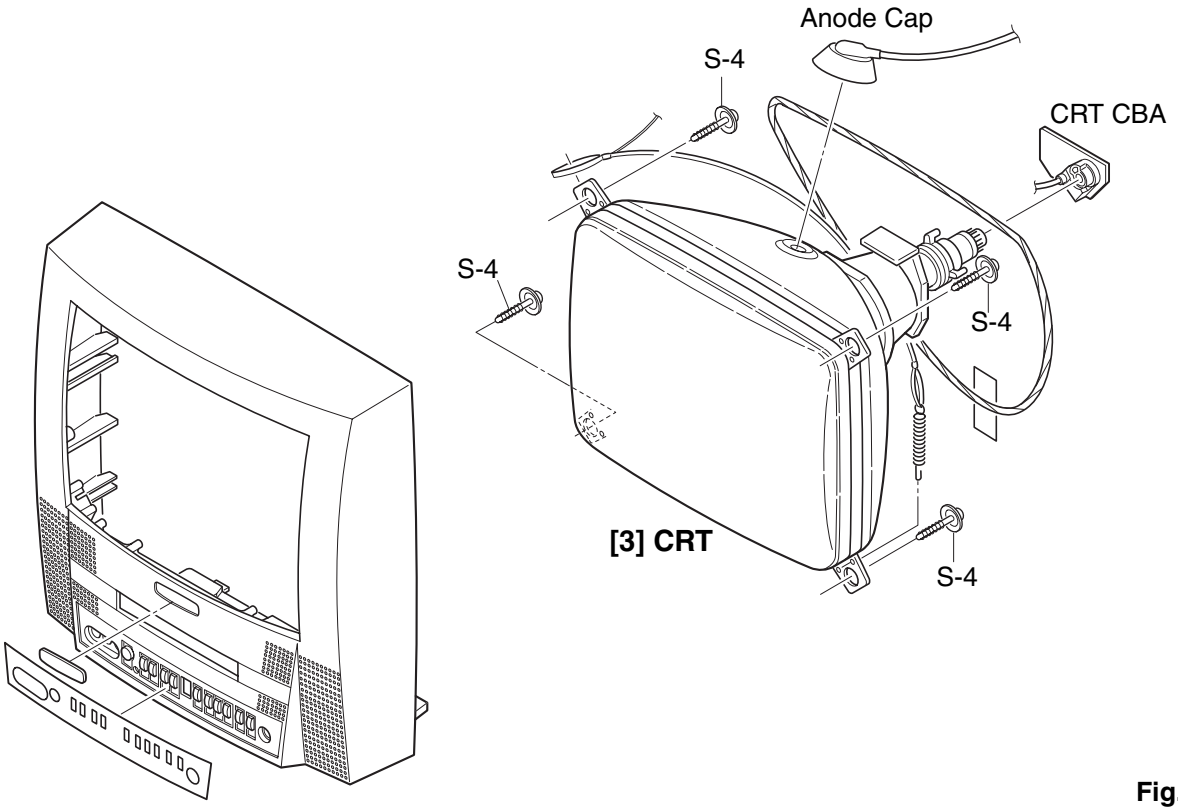
Anode Cap
S-4
CRT CBA
S-4
S-4
[3] CRT
S-4

Fig. 2

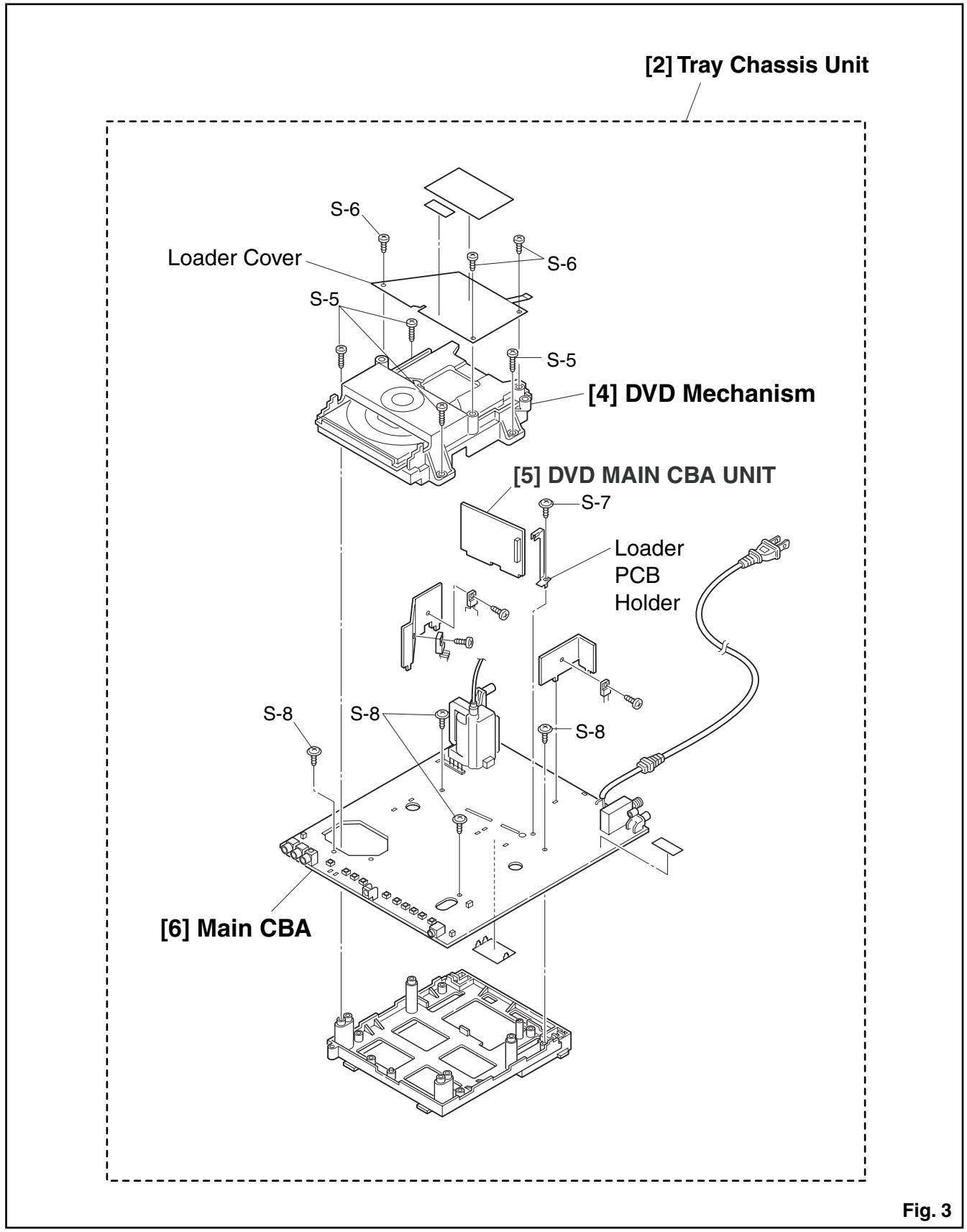
[2] Tray Chassis Unit
S-6
Loader Cover
S-6
S-5
S-5
[4] DVD Mechanism
[5] DVD MAIN CBA UNIT
S-7
Loader
PCB
Holder
S-8
S-8
S-8
[6] Main CBA

Fig. 3

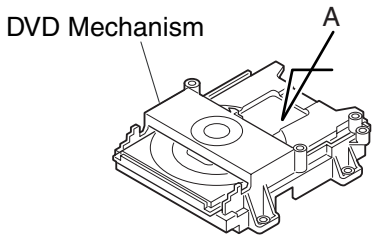

Short the three short lands by soldering.
(Either of two places.)

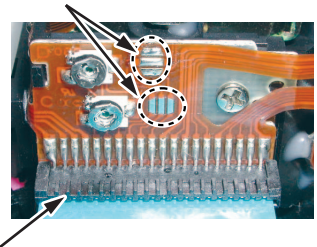

Connector

View for A

Fig. 4

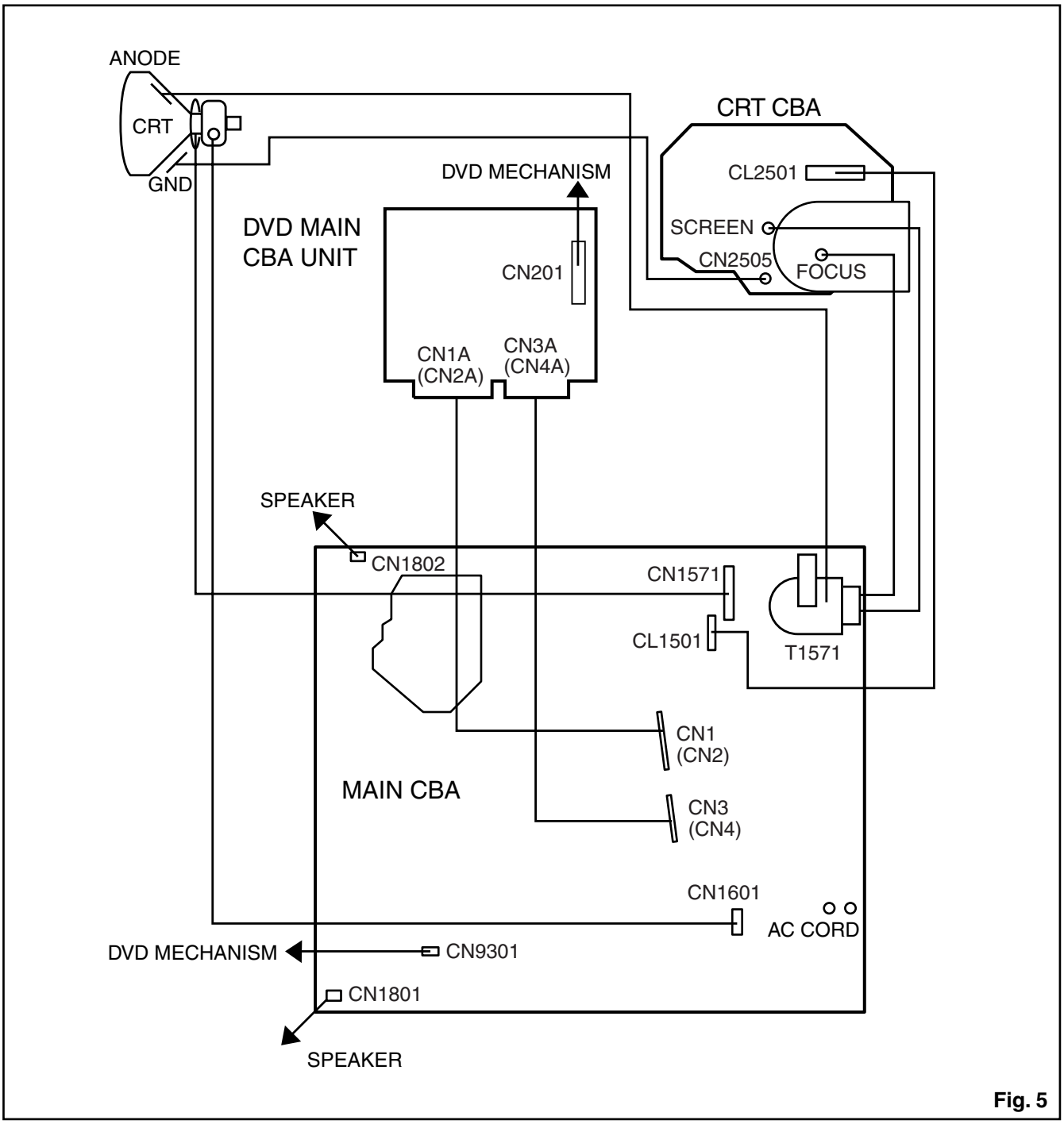
ANODE
CRT
GND
CRT CBA
CL2501
SCREEN
CN2505
FOCUS
DVD MECHANISM
DVD MAIN
CBA UNIT
CN201
CN1A
(CN2A)
CN3A
(CN4A)
SPEAKER
CN1802
CN1571
CL1501
T1571
CN1
(CN2)
MAIN CBA
CN3
(CN4)
CN1601
AC CORD
DVD MECHANISM
CN9301
CN1801
SPEAKER

Fig. 5

ELECTRICAL ADJUSTMENT INSTRUCTIONS

General Note:

"CBA" is abbreviation for "Circuit Board Assembly."

NOTE:

Electrical adjustments are required after replacing circuit components and certain mechanical parts. It is important to perform these adjustments only after all repairs and replacements have been completed.
Also, do not attempt these adjustments unless the proper equipment is available.

Test Equipment Required

1. NTSC Pattern Generator (Color Bar W/White Window, Red Color, Dot Pattern, Gray Scale, Monoscope, Multi-Burst)
2. AC Milli Voltmeter (RMS)
3. DC Voltmeter
4. Oscilloscope: Dual-trace with 10:1 probe,
   V-Range: 0.001~50V/Div,
   F-Range: DC~AC-60MHz
5. Frequency Counter
6. Plastic Tip Driver
7. Color Analyzer

How to make service remote control unit:

1. Prepare remote control unit (Part No. NE207UD). Remove 4 screws from the back lid. (Fig. 1-1)

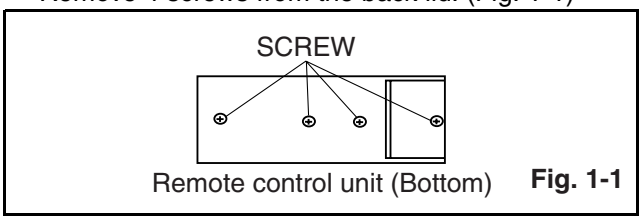

Fig. 1-1

2. Cut off pin 10 of the remote control microprocessor and short circuit pins 10 and 17 of the microprocessor with a jumper wire.

How to Set up the Service mode:

Service mode:

1. Use the service remote control unit.
2. Turn the power on.
3. Press "DISC MENU" button on the service remote control unit.

1. DC 105V (+B) Adjustment

Purpose: To obtain correct operation.

Symptom of Misadjustment: The picture is dark and unit does not operate correctly.

Test point	Adj. Point	Mode	Input
J1160 (+B) TP1405 (GND)	VR1601	---	-----
Tape	**M. EQ.**	**Spec.**	
---	DC Voltmeter Plastic Tip Driver	+105±0.5V DC	

Note:
J1160 (+B), TP1405 (GND), VR1601 --- Main CBA

1. Connect the unit to AC Power Outlet.
2. Connect DC Volt Meter to J1160 (+B) and TP1405 (GND).
3. Adjust VR1601 so that the voltage of J1160 (+B) becomes +105±0.5V DC.

2. Setting for BRIGHT, CONTRAST, COLOR, TINT, V-TINT and SHARP Data Values

General

1. Enter the Service mode. (See page 1-6-1.)
2. Press "PICTURE" button on the service remote control unit. Display changes "BRT," "CNT," "COL," "TNT," "V-TNT," and "SHP" cyclically when "PICTURE" button is pressed.

BRIGHT (BRT)

1. Press "PICTURE" button on the service remote control unit. Then select "BRIGHT" (BRT) display.
2. Press "CH. ▲ / ▼" buttons on the service remote control unit so that the value of "BRIGHT" (BRT) becomes 90.

CONTRAST (CNT)

1. Press "PICTURE" button on the service remote control unit. Then select "CONTRAST" (CNT) display.
2. Press "CH. ▲ / ▼" buttons on the service remote control unit so that the value of "CONTRAST" (CNT) becomes 80.

COLOR (COL)

1. Press "PICTURE" button on the service remote control unit. Then select "COLOR" (COL) display.
2. Press "CH. ▲ / ▼" buttons on the service remote control unit so that the value of "COLOR" (COL) becomes 58.

TINT (TNT)

1. Press "PICTURE" button on the service remote control unit. Then select "TINT" (TNT) display.
2. Press "CH. ▲ / ▼" buttons on the service remote control unit so that the value of "TINT" (TNT) becomes 57.

V-TINT (V-TNT)

1. Press "PICTURE" button on the service remote control unit. Then select "V-TINT" (V-TNT) display.
2. Press "CH. ▲ / ▼" buttons on the service remote control unit so that the value of "V-TINT" (V-TNT) becomes 56.

SHARP (SHP)

1. Press "PICTURE" button on the service remote control unit. Then select "SHARP" (SHP) display.
2. Press "CH. ▲ / ▼" buttons on the service remote control unit so that the value of "SHARP" (SHP) becomes 40.

3. C-Trap Adjustment

Purpose: To get minimum leakage of the color signal carrier.

Symptom of Misadjustment: If C-Trap Adjustment is incorrect, stripes will appear on the screen.

Test point	Adj. Point	Mode	Input
TP1503 (B-OUT)	CH. ▲ / ▼ buttons	---	Color Bar
Tape	**M. EQ.**	**Spec.**	
---	Oscilloscope Pattern Generator	---	
Figure			

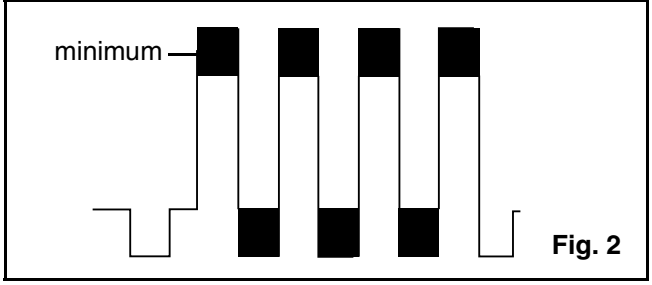

Fig. 2

Note: TP1503 (B-OUT)--- Main CBA

1. Connect oscilloscope to TP1503.
2. Input a color bar signal from RF input.
   Enter the Service mode. (See page 1-6-1.)
3. Press "0" button on the remote control unit and select C-TRAP mode. (Fig. 3)
4. Press "CH. ▲ / ▼" buttons on the remote control unit so that the carrier leakage B-Out (3.58MHz) value becomes minimum on the oscilloscope.
5. Turn the power off and on again.

4. V. Size Adjustment

Purpose: To obtain correct vertical height of screen image.

Symptom of Misadjustment: If V. Size is incorrect, vertical height of image on the screen may not be properly displayed.

Test point	Adj. Point	Mode	Input
---	CH. ▲ / ▼ buttons	---	Monoscope
Tape	**M. EQ.**	**Spec.**	
---	Pattern Generator	90±5%	

1. Operate the unit for at least 20 minutes.
2. Enter the Service mode. (See page 1-6-1.)
   Press "9" button on the remote control unit and select V-S mode. (Press "9" button then display will change to V-P and V-S).
3. Input monoscope pattern.
4. Press "CH. ▲ / ▼" buttons on the remote control unit so that the monoscope pattern is 90±5% of display size and the circle is round.

5. V. Shift Adjustment

Purpose: To obtain correct vertical position of screen image.

Symptom of misadjustment: If V. Position is incorrect, vertical position of image on the screen may not be properly displayed.

Test point	Adj. Point	Mode	Input
---	Screen Control, CH. ▲ / ▼ buttons	RF	Monoscope
Tape	**M. EQ.**	**Spec.**	
---	Pattern Generator	90±5%	

Note: Use service remote control unit

1. Operate the unit for at least 20 minutes.
2. Enter the Service mode. (See page 1-6-1.)
3. Input monoscope pattern.
4. Press "9" button on the service remote control unit and select "V-P" mode. (Display changes "V-S" and "V-P" cyclically when "9" button is pressed.)
5. Press "CH. ▲ / ▼" buttons on the service remote control unit so that the top and bottom of the monoscope pattern are equal to each other.
6. Turn the power off and on again, using the main power button on the TV unit.

6. H. Position Adjustment

Purpose: To obtain correct horizontal position of screen image.

Symptom of Misadjustment: If H. Position is incorrect, horizontal position of image on the screen may not be properly displayed.

Test Point	Adj. Point	Mode	Input
---	CH. ▲ / ▼ buttons [H-P] mode	RF	Mono-scope
Tape	**M. EQ.**	**Spec.**	
---	Pattern Generator	90±5%	

Note: Use service remote control unit

1. Operate the unit for at least 20 minutes.
2. Enter the Service mode. (See page 1-6-1.)
3. Input monoscope pattern.
4. Press "8" button on the remote control unit and select "H-P" mode.
5. Press "CH. ▲ / ▼" buttons on the service remote control unit so that the monoscope pattern is 90±5% of display size and the circle is round.
6. Turn the power off and on again, using the main power button on the TV unit.

7. White Balance Adjustment

Purpose: To mix red, green and blue beams correctly for pure white.

Symptom of Misadjustment: White becomes bluish or reddish.

Test Point	Adj. Point	Mode	Input
Screen	CH. ▲ / ▼ buttons	RF	White Raster (APL 100%)
Tape	**M. EQ.**	**Spec.**	
---	Pattern Generator, Color analyzer	See below	
Figure			

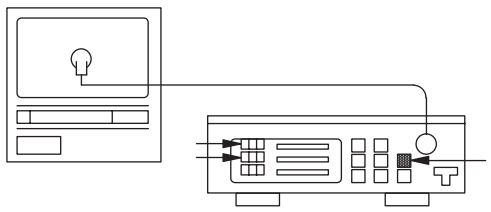

Fig. 4

Note: Use service remote control unit

1. Operate the unit more than 20 minutes.
2. Face the unit to the east. Degauss the CRT using a degaussing coil.
3. Input the White Raster (APL 100%).
4. Set the color analyzer to the CHROMA mode and after zero point calibration, bring the optical receptor to the center on the tube surface (CRT).
5. Enter the Service mode. Press "VOL ▼" button on the service remote control unit and select "C/D" mode. (Display changes "C/D" and "7F" cyclically when "VOL ▼" button is pressed.)
6. Press "4" button on the service remote control unit for Red adjustment. Press "5" button on the service remote control unit for Blue adjustment.
7. In each color mode, press "CH. ▲ / ▼" buttons to adjust values of color.
8. Adjust Red and Blue color so that the temperature becomes 9200K (x: 286 / y: 294) ±3%.
9. At this time, check that horizontal line is white. If not, adjust Cut-off Adjustment until the horizontal line becomes pure white.
10. Turn off and on again to return to normal mode. Receive APL 100% white signal and confirm that Chroma temperatures become 9200K (x: 286 / y: 294) ±3%.

Note: Confirm that Cut Off Adj. is correct after this adjustment, and attempt Cut Off Adj. if needed.

8. Sub-Brightness Adjustment

Purpose: To get proper brightness.

Symptom of Misadjustment: If Sub-Brightness is incorrect, proper brightness cannot be obtained by adjusting the Brightness Control.

Test Point	Adj. Point	Mode	Input
---	CH. ▲ / ▼ buttons	RF	IQW
Tape	**M. EQ.**	**Spec.**	
---	Pattern Generator	See below	
Figure			

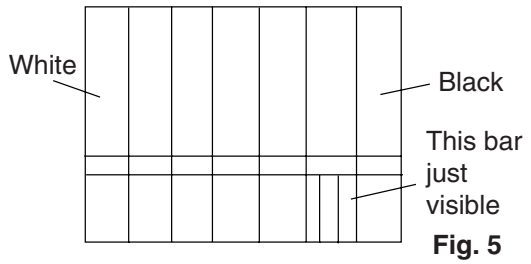

Fig. 5

Note: IQW Setup level --- 7.5 IRE
Use service remote control unit

1. Enter the Service mode. (See page 1-6-1.) Then input IQW signal from RF Input.
2. Press "PICTURE" button on the service remote control unit and select "BRT" mode. (Display changes "BRT," "CNT," "COL," "TNT," "V-TNT," and "SHP" cyclically when "PICTURE" button is pressed.) Press "CH. ▲ / ▼" buttons so that the bar is just visible (See above figure).
3. Turn the power off and on again, using the main power button on the TV unit.

9. Focus Adjustment

Purpose: Set the optimum Focus.

Symptom of Misadjustment: If Focus Adjustment is incorrect, blurred images are shown on the display.

Test Point	Adj. Point	Mode	Input
---	Focus Control	RF	Mono-scope
Tape	**M. EQ.**	**Spec.**	
---	Pattern Generator	See below	

Note: Focus VR (FBT) --- Main CBA,
FBT= Fly Back Transformer

1. Operate the unit more than 30 minutes
2. Face the unit to the East and degauss the CRT using a degaussing coil.
3. Input monoscope pattern.
4. Adjust the Focus Control on the FBT to obtain a clear picture.

10. H f_0 Adjustment

Purpose: To get correct horizontal frequency.

Symptom of Misadjustment: If H f_0 adjustment is incorrect, skew distortion will appear on the screen.

Test Point	Adj. Point	Mode	Input
R1583	CH. ▲ / ▼ button ["H-ADJ"] MODE	Video	---
Tape	**M. EQ.**	**Spec.**	
---	Frequency Counter	15.734kHz±300Hz	

Note: R1583 --- Main CBA
Use Service remote control unit.

1. Connect frequency counter to R1583 and ground.
2. Set the unit to the VIDEO mode which is located before CH2 and no input is necessary. Enter the Service mode. (See page 1-6-1.)
3. Operate the unit for at least 20 minutes.
4. Press "2" button on the Service remote control unit and select H-ADJ mode.
5. Press "CH. ▲ / ▼" buttons on the Service remote control unit so that the display will change "0" ~ "7." At this moment, choose display "0" ~ "7" when the frequency counter display is closest to 15.734 kHz±300Hz.
6. Turn the power off and on again, using the main power button on the TV unit.

11. Cut-off Adjustment

Purpose: To adjust the beam current of R, G, B, and screen voltage.

Symptom of Misadjustment: White color may be reddish, greenish or bluish.

Test Point	Adj. Point	Mode	Input
---	Screen-Control CH. ▲ / ▼ buttons	RF	Black Raster
Tape	**M. EQ.**	**Spec.**	
---	Pattern Generator	See Reference Notes below.	
Figure			

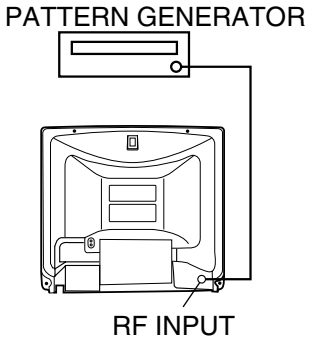

Fig. 6

Note: Screen Control FBT --- Main CBA
FBT= Fly Back Transformer
Use service remote control unit

1. Degauss the CRT and allow the unit to operate for 20 minutes before starting the alignment.
2. Input the Black Raster Signal from RF Input.
3. Enter the Service mode. (See page 1-6-1.)
4. Press "VOL ▼" button on the service remote control unit and select "C/D" mode. (Display changes "C/D" and "7F" cyclically when "VOL ▼" button is pressed.) Then press "1." The display will momentarily show "CUT OFF R" (R= Red.) Now there should be a horizontal line across the center of the picture tube. If needed, gradually turn the screen control on the flyback clockwise until the horizontal line appears. Adjust the Red Cut off by pressing the "CH. ▲ / ▼" buttons. Proceed to Step 5 when the Red Cut off adjustment is done.
5. Press the "2" button. The display will momentarily show "CUT OFF G" (G=Green.) Adjust the Green Cut off by pressing the "CH. ▲ / ▼" buttons. Proceed to step 6 when the Green Cut off adjustment is done.
6. Press the "3" button. The display will momentarily show "CUT OFF B" (B=Blue.) Adjust the Blue cut off by pressing the "CH. ▲ / ▼" buttons. When done with steps 4, 5 and 6 the horizontal line should be pure white. If not, then attempt the Cut off adjustment again.

The following 2 adjustments normally are not attempted in the field. They should be done only when replacing the CRT then adjust as a preparation.

12. Purity Adjustment

Purpose: To obtain pure color.

Symptom of Misadjustment: If Color Purity Adjustment is incorrect, large areas of color may not be properly displayed.

Test point	Adj. Point	Mode	Input
---	Deflection Yoke Purity Magnet	---	*Red Color
Tape	**M. EQ.**	**Spec.**	
---	Pattern Generator	See below.	
Figure			

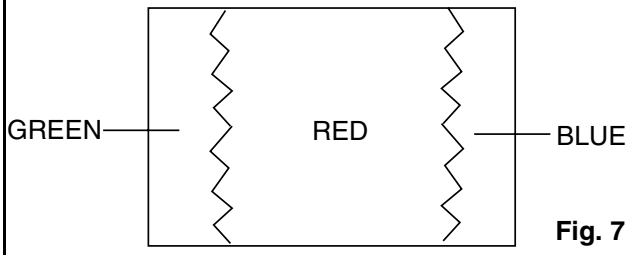

Fig. 7

* This becomes RED COLOR if the 7KEY is pressed while in service mode.

1. Set the unit facing east.
2. Operate the unit for over 30 minutes before adjusting.
3. Fully degauss the unit using an external degaussing coil.
4. Set the unit to the AUX mode which is located before CH2, then input a red raster from video in.
5. Loosen the screw on the Deflection Yoke Clamper and pull the Deflection Yoke back away from the screen. (See Fig. 8.)
6. Loosen the Ring Lock and adjust the Purity Magnets so that a red field is obtained at the center of the screen. Tighten Ring Lock. (See Fig. 7,8.)
7. Slowly push the Deflection Yoke toward the bell of the CRT and set it where a uniform red field is obtained.
8. Tighten the clamp screw on the Deflection Yoke.

13. Convergence Adjustment

Purpose: To obtain proper convergence of red, green and blue beams.

Symptom of Misadjustment: If Convergence Adjustment is incorrect, the edge of white letters may have color edges.

Test point	Adj. Point	Mode	Input
---	C.P. Magnet (RB), C.P. Magnet (RB-G), Deflection Yoke	---	Dot Pattern or Crosshatch
Tape	**M. EQ.**	**Spec.**	
---	Pattern Generator	See below.	
Figure			

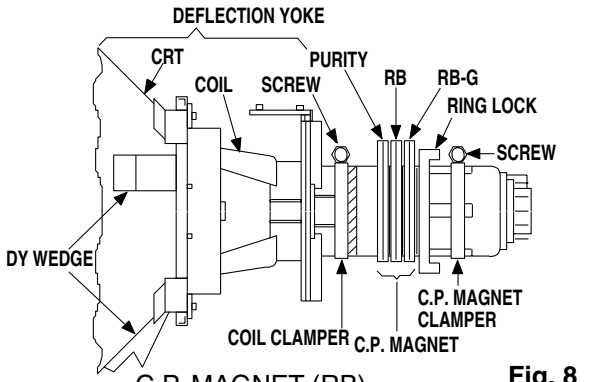

Fig. 8

C.P. MAGNET (RB)

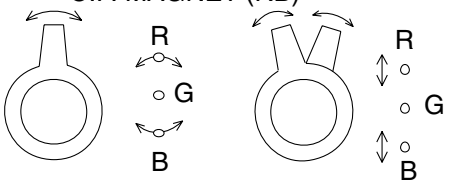

Fig. 9

C.P. MAGNET (RB-G)

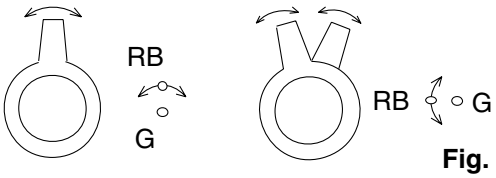

Fig. 10

1. Set the unit to the AUX mode which is located before CH2, then input a dot or crosshatch pattern.
2. Loosen the Ring Lock and align red with blue dots or crosshatch at the center of the screen by rotating (RB) C.P. Magnets. (See Fig. 9.)
3. Align red / blue with green dots at the center of the screen by rotating (RB-G) C.P. Magnet. (See Fig. 10.)
4. Fix the C.P. Magnets by tightening the Ring Lock.
5. Remove the DY Wedges and slightly tilt the Deflection Yoke horizontally and vertically to obtain the best overall convergence.
6. Fix the Deflection Yoke by carefully inserting the DY Wedges between CRT and Deflection Yoke.

HOW TO INITIALIZE THE TV/DVD

To put the program back at the factory-default, initialize the TV/DVD as the following procedure.

< DVD Section >

1. Press [1], [2], [3], [4], and [DISPLAY] buttons on the remote control unit in that order.
   Fig. g appears on the screen.

"*******" differ depending on the models.

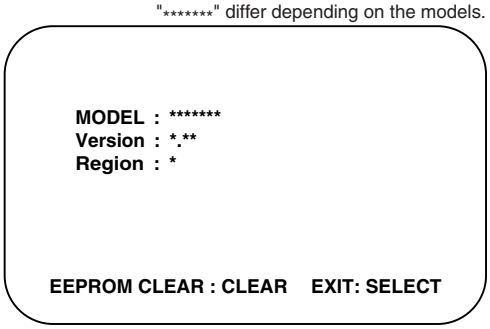

Fig. g

2. Press [CLEAR] button on the remote control unit.
   Fig. h appears on the screen.

"*******" differ depending on the models.

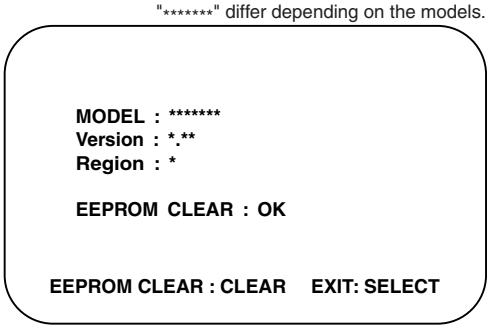

Fig. h

   When “OK” appears on the screen, the factory default will be set.
3. To exit this mode, press [CH. ▲ / ▼] or [SELECT] button to go to TV mode, or press [POWER] button to turn the power off.

< TV Section >

1. Use the service remote control unit.
2. Turn the power on. (Use main power on the TV unit.)
3. Press [DISC MENU] button on the service remote control unit to enter the Service mode. (Refer to “How to Set up the Service mode” on page 1-6-1.)
4. Press [VOL ▼] button on the service remote control unit twice, and confirm that OSD indication is “7F = FF.” If needed, set it to become “7F = FF” by pressing [CH. ▲ / ▼] buttons on the service remote control unit.
5. Confirm that OSD indication on the four corners on TV screen changes from on and off light indication to red by pressing a [DISPLAY] button. (It is necessary for one or two seconds.)
6. Turn the power off by pressing main power button on the TV unit, and unplug the AC cord from the AC outlet.

FIRMWARE RENEWAL MODE

1. Turn the power on and press [SELECT] button on the remote control unit to put the TV/DVD into DVD mode. Then remove the disc on the tray.
   (It is possible to move to F/W version up mode only when the TV/DVD is in DVD mode with the tray open.)
2. To put the TV/DVD into F/W version up mode, press [9], [8], [7], [6], and [SEARCH MODE] buttons on the remote control unit in that order.
   Fig. a appears on the screen.

"*******" differ depending on the models.

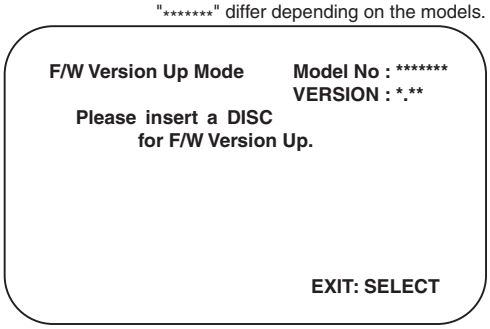

Fig. a Version Up Mode Screen

The TV/DVD can also enter the version up mode with the tray open. In this case, Fig. a will be shown on the screen while the tray is open.

3. Load the disc for version up.
4. The TV/DVD enters the F/W version up mode automatically. Fig. c appears on the screen. If you enter the F/W for different models, “Disc Error” will appear on the screen, then the tray will open automatically.

"*******" differ depending on the models.

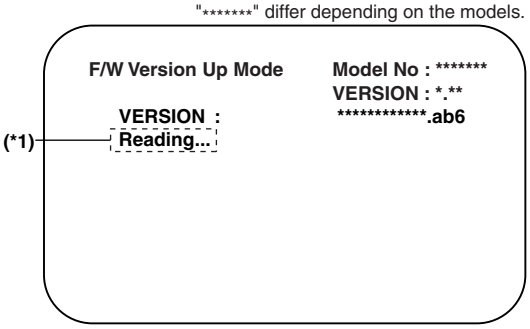

Fig. c Programming Mode Screen

The appearance shown in (*1) of Fig. c is described as follows:

No.	Appearance	State
1	Reading...	Sending files into the memory
2	Erasing...	Erasing previous version data
3	Programming...	Writing new version data

5. After programming is finished, the tray opens automatically. Fig. e appears on the screen and the checksum will be shown in (*2).

"*******" differ depending on the models.

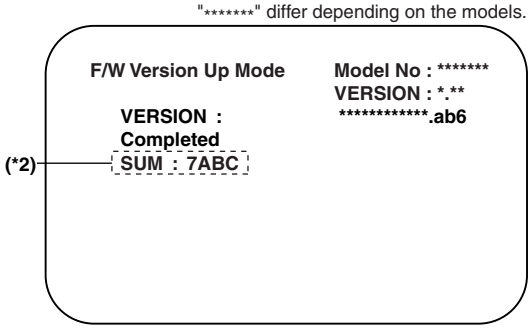

Fig. e Completed Program Mode Screen

At this time, no button is available.

6. Remove the disc on the tray.
7. Press [CH. ▲ / ▼] button on the unit to go to TV mode, or press [POWER] button on the unit to turn the power off.
8. Press [SELECT] button on the remote control unit to put the TV/DVD into DVD mode again.
9. Press [1], [2], [3], [4], and [DISPLAY] buttons on the remote control unit in that order.
   Fig. g appears on the screen.

"*******" differ depending on the models.

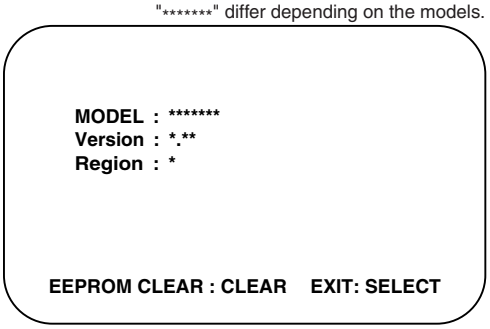

Fig. g

10. Press [CLEAR] button on the remote control unit.
    Fig. h appears on the screen.

"*******" differ depending on the models.

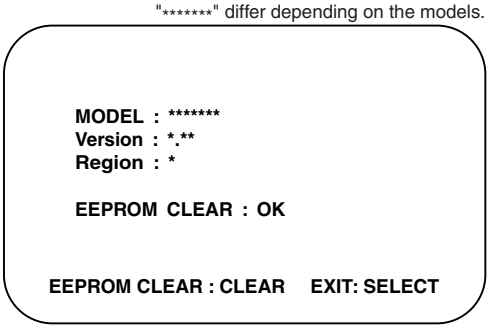

Fig. h

When “OK” appears on the screen, the factory default will be set. Then the firmware renewal mode is complete.

11. To exit this mode, press [CH. ▲ / ▼] or [SELECT] button to go to TV mode, or press [POWER] button to turn the power off.

BLOCK DIAGRAMS < TV Section >

System Control Block Diagram

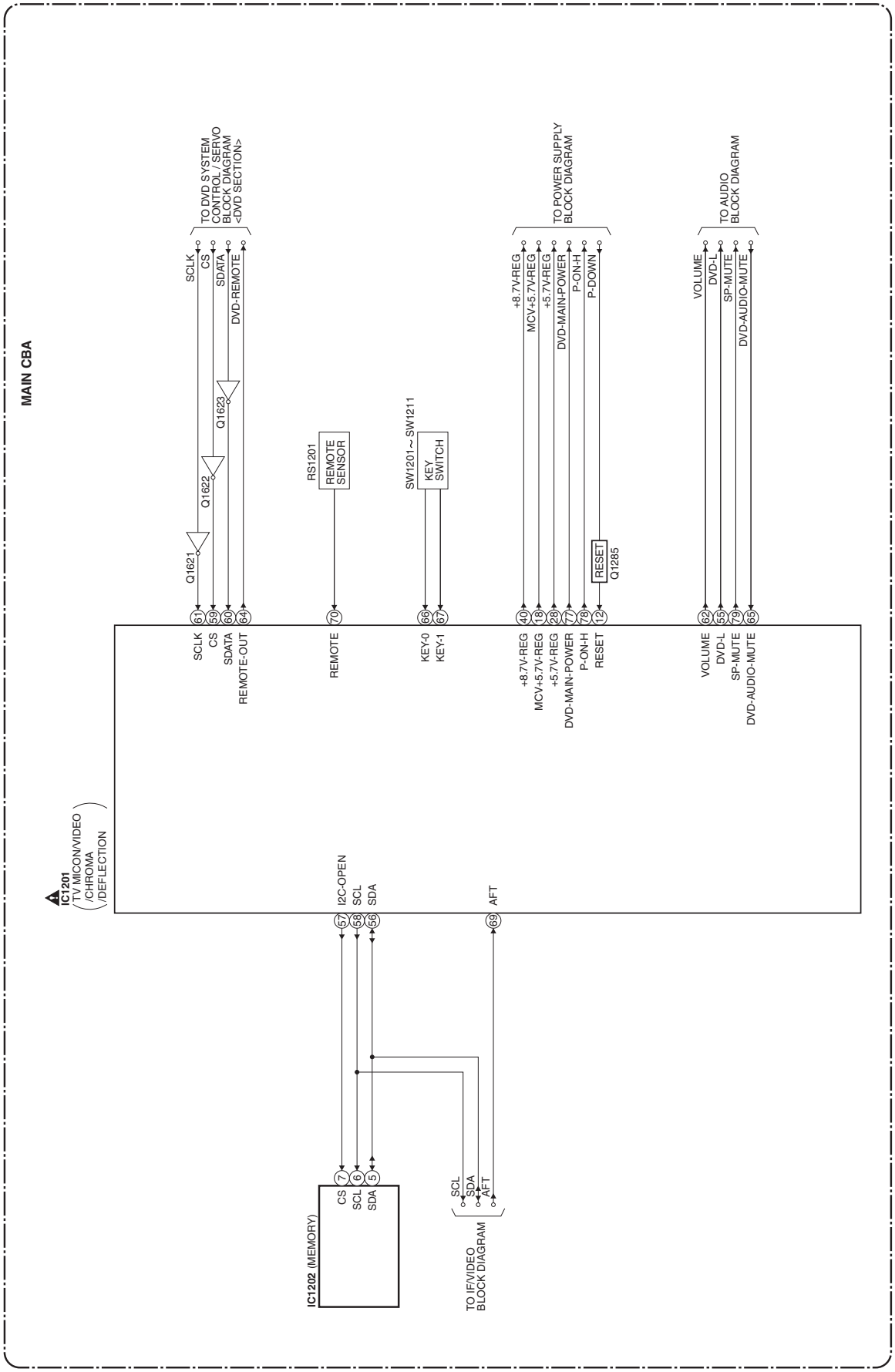

IF/Video Block Diagram

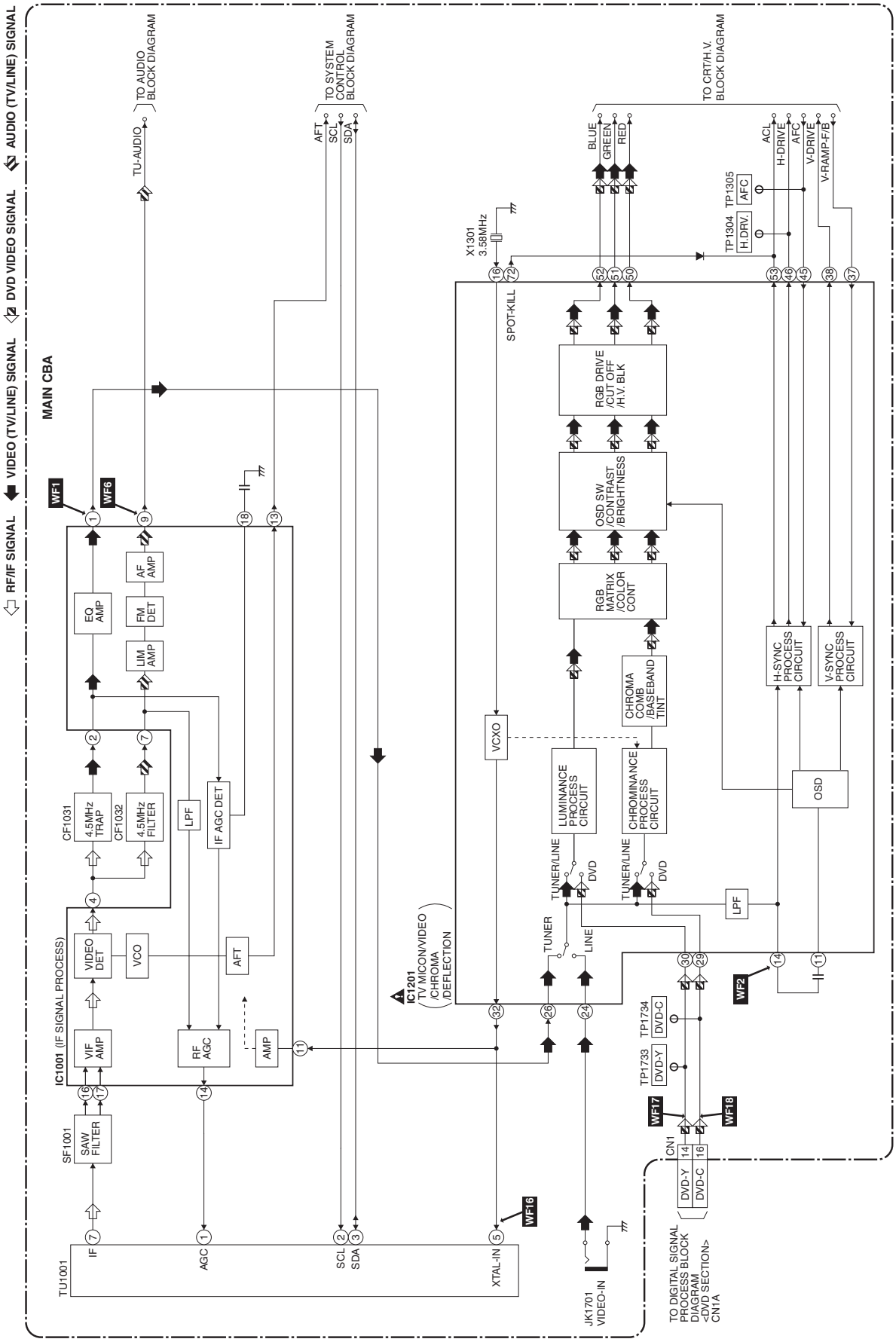

Audio Block Diagram

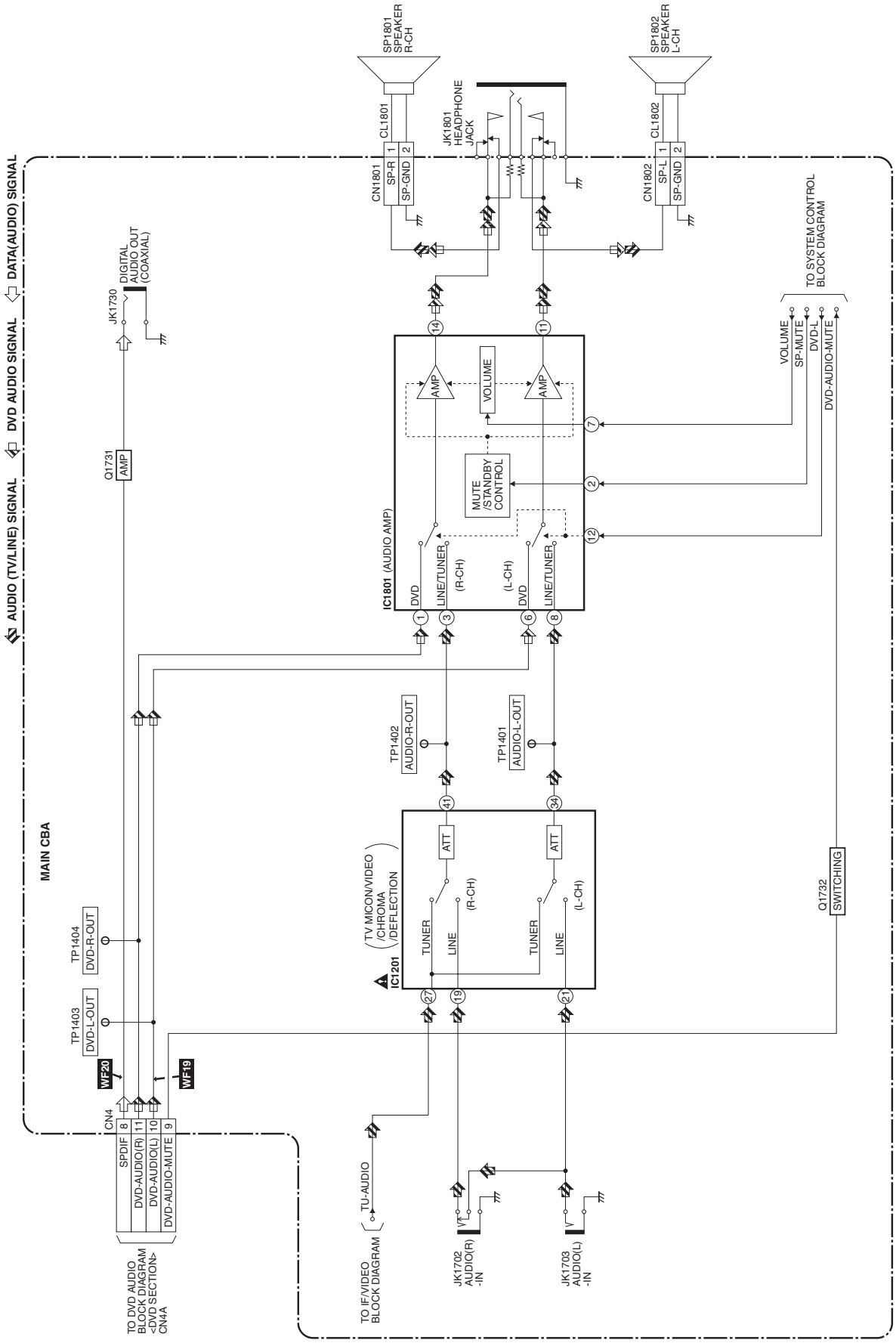

CRT/H.V. Block Diagram

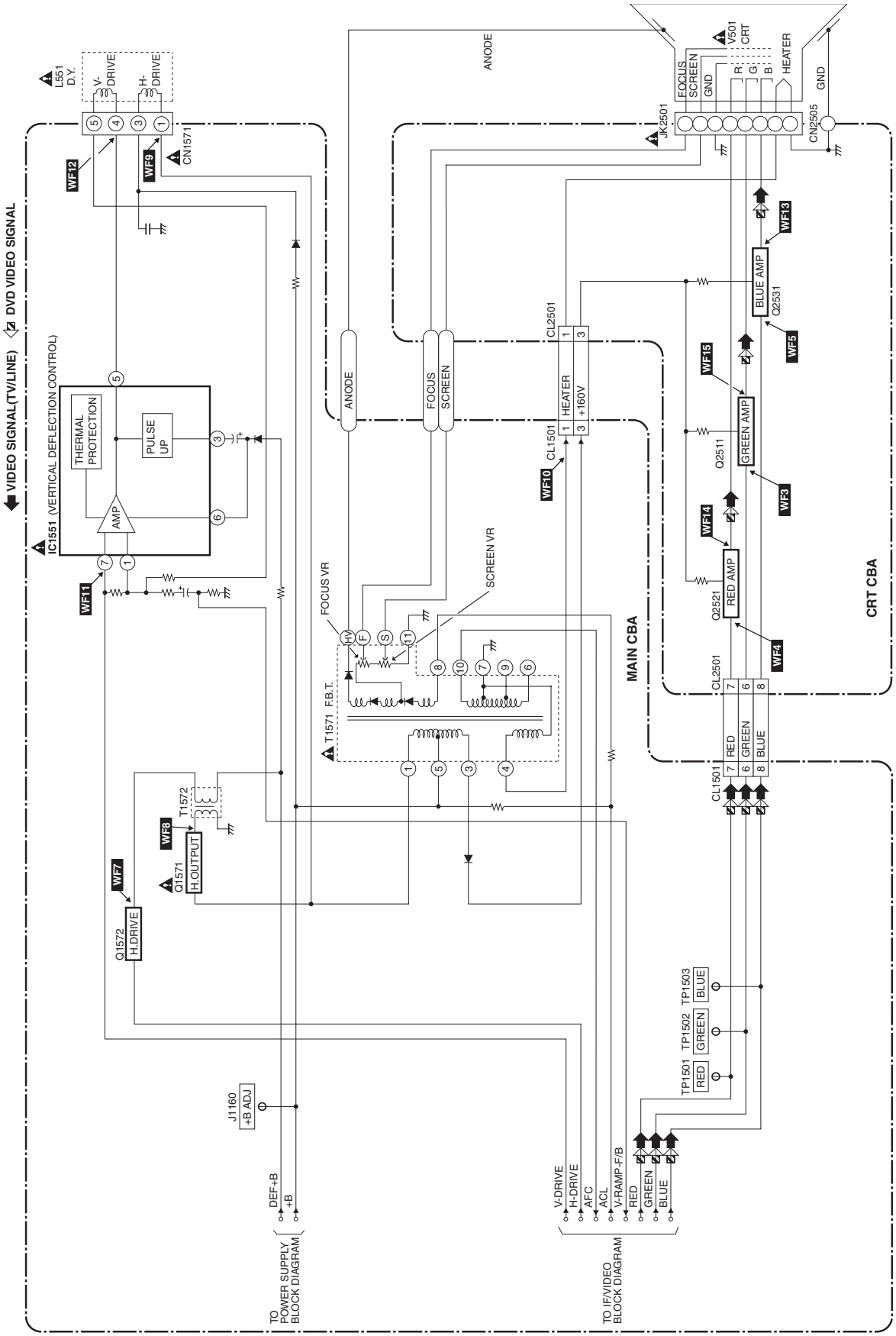

Power Supply Block Diagram

NOTE:
The voltage for parts in hot circuit is measured using hot GND as a common terminal.

CAUTION ! : For continued protection against risk of fire, replace only with same type 4 A, 125V fuse.
ATTENTION : Utiliser un fusible de rechange de même type de 4A, 125V.

CAUTION !
Fixed voltage (or Auto voltage selectable) power supply circuit is used in this unit.
If Main Fuse (F1601) is blown , check to see that all components in the power supply circuit are not defective before you connect the AC plug to the AC power supply.
Otherwise it may cause some components in the power supply circuit to fail.

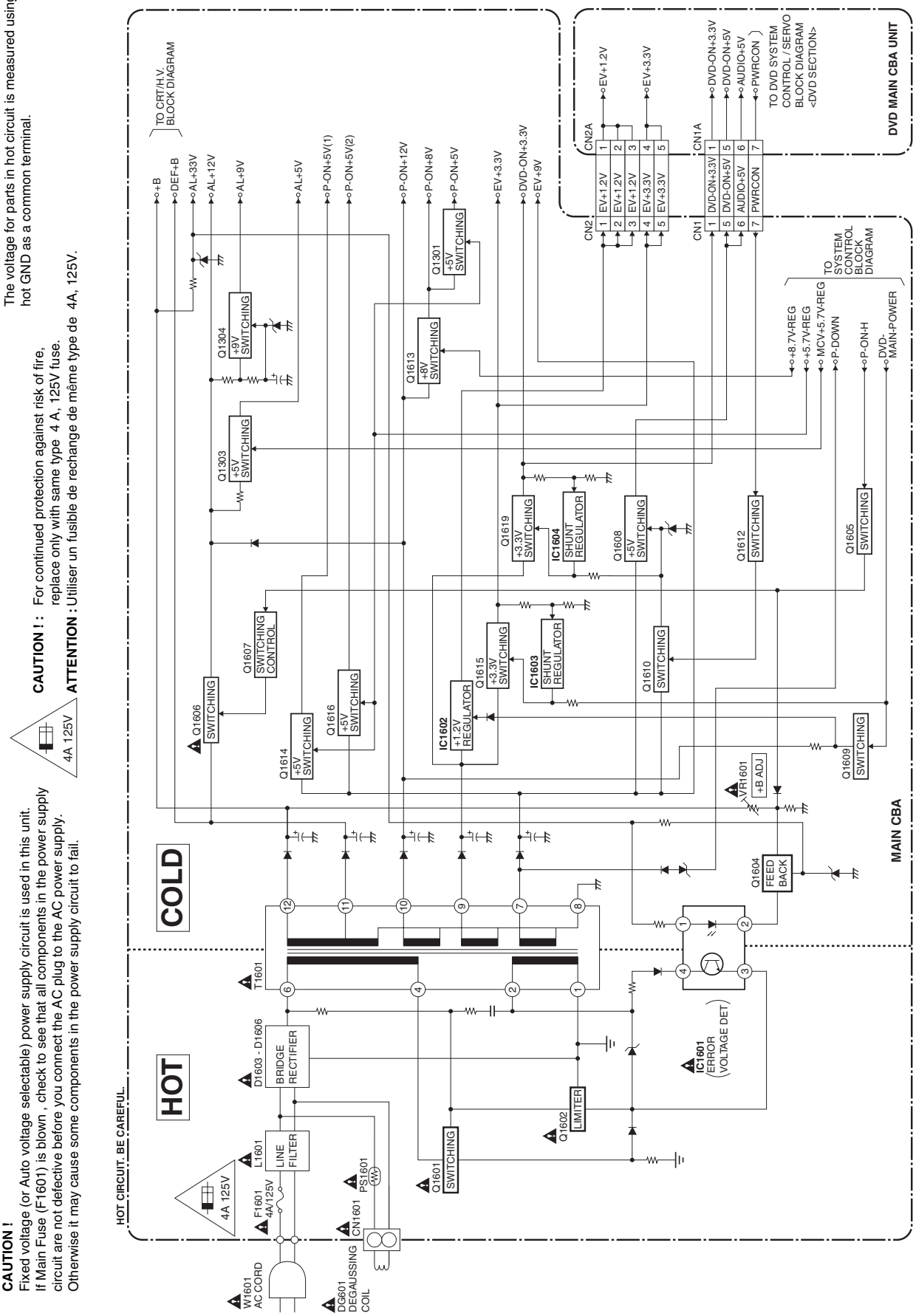

BLOCK DIAGRAMS < DVD Section >

DVD System Control / Servo Block Diagram

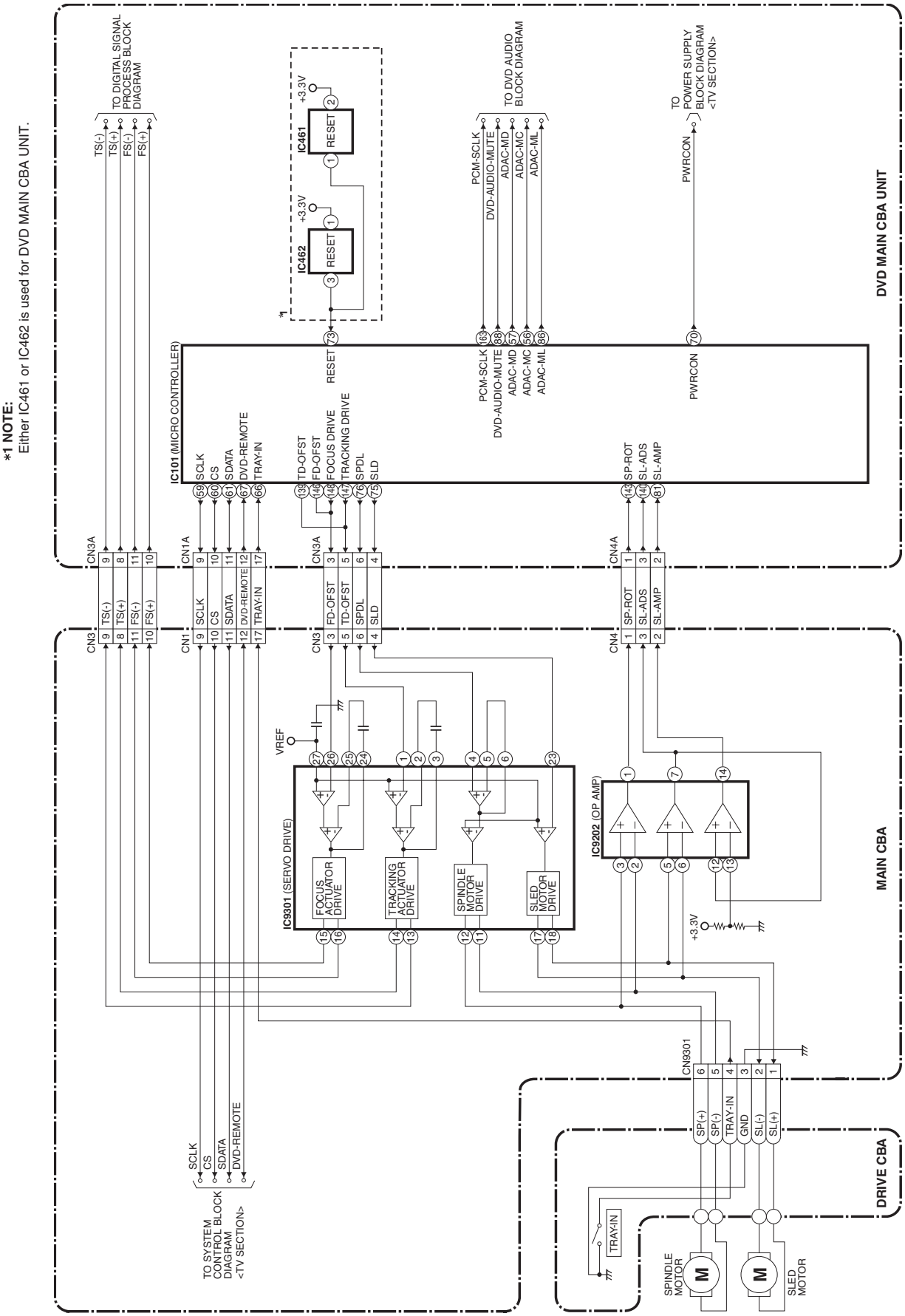

Digital Signal Process Block Diagram

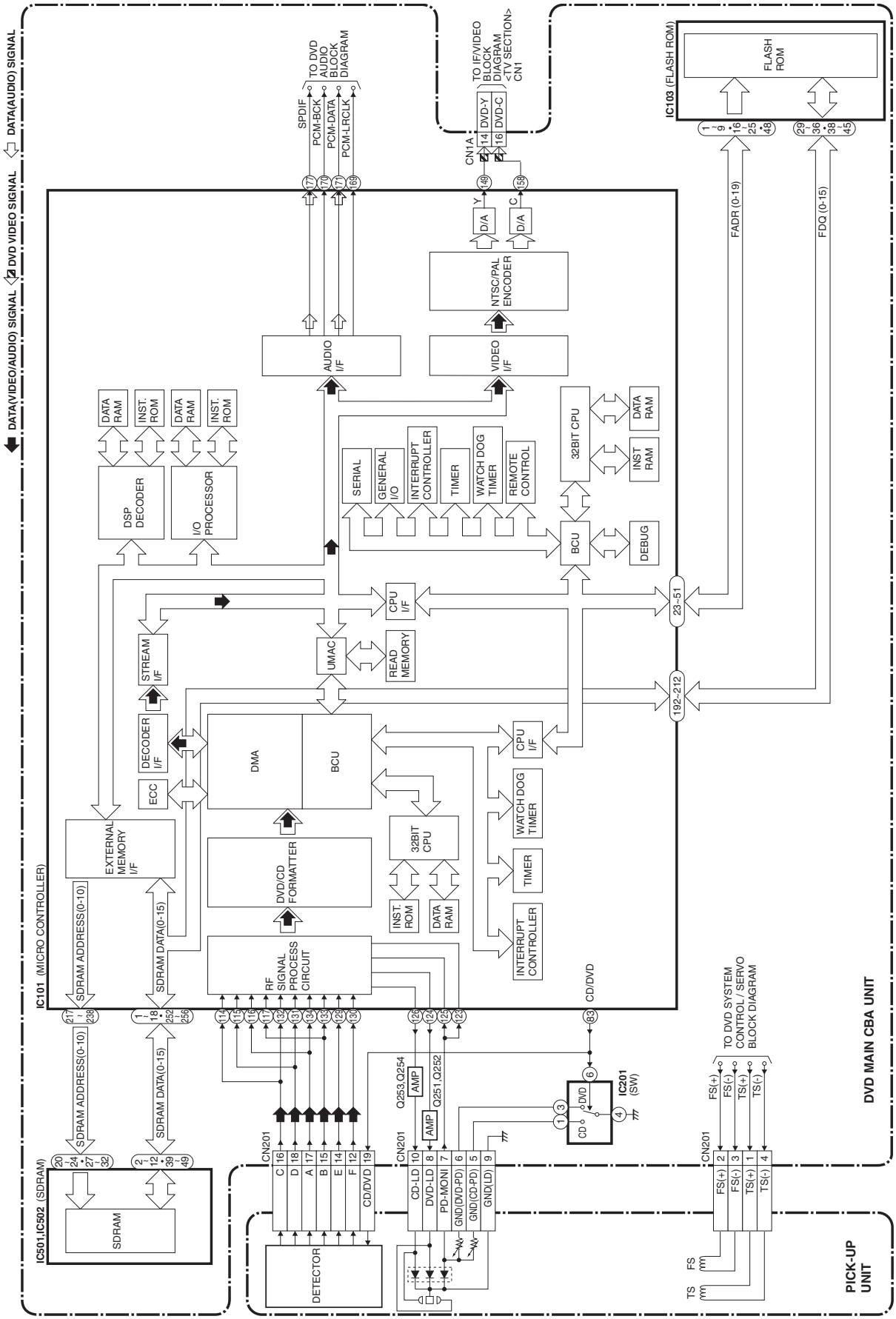

DVD Audio Block Diagram

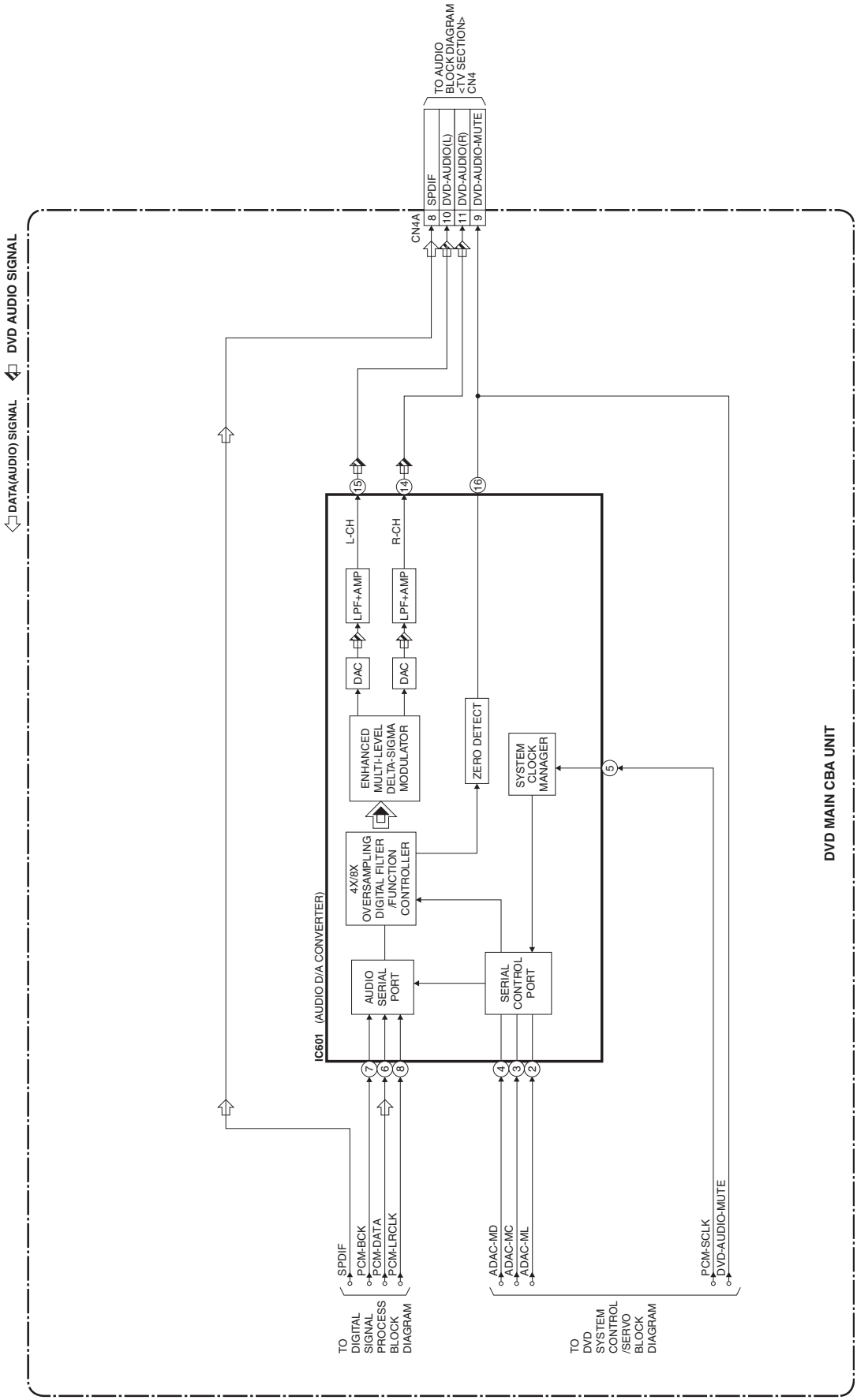

SCHEMATIC DIAGRAMS / CBA'S AND TEST POINTS

Standard Notes

WARNING

Many electrical and mechanical parts in this chassis have special characteristics. These characteristics often pass unnoticed and the protection afforded by them cannot necessarily be obtained by using replacement components rated for higher voltage, wattage, etc. Replacement parts that have these special safety characteristics are identified in this manual and its supplements; electrical components having such features are identified by the mark "⚠" in the schematic diagram and the parts list. Before replacing any of these components, read the parts list in this manual carefully. The use of substitute replacement parts that do not have the same safety characteristics as specified in the parts list may create shock, fire, or other hazards.

Notes:

1. Do not use the part number shown on these drawings for ordering. The correct part number is shown in the parts list, and may be slightly different or amended since these drawings were prepared.
2. All resistance values are indicated in ohms ($K = 10^3$, $M = 10^6$).
3. Resistor wattages are 1/4W or 1/6W unless otherwise specified.
4. All capacitance values are indicated in μF ($P = 10^{-6}$ μF).
5. All voltages are DC voltages unless otherwise specified.

LIST OF CAUTION, NOTES, AND SYMBOLS USED IN THE SCHEMATIC DIAGRAMS ON THE FOLLOWING PAGES:

1. CAUTION: FOR CONTINUED PROTECTION AGAINST RISK OF FIRE, REPLACE ONLY WITH SAME TYPE_A,_V FUSE.
ATTENTION: UTILISER UN FUSIBLE DE RECHANGE DE MÊME TYPE DE_A,_V.

2. CAUTION:

Fixed Voltage (or Auto voltage selectable) power supply circuit is used in this unit.
If Main Fuse (F1601) is blown, first check to see that all components in the power supply circuit are not defective before you connect the AC plug to the AC power supply. Otherwise it may cause some components in the power supply circuit to fail.

3. Note:

1. Do not use the part number shown on the drawings for ordering. The correct part number is shown in the parts list, and may be slightly different or amended since the drawings were prepared.
2. To maintain original function and reliability of repaired units, use only original replacement parts which are listed with their part numbers in the parts list section of the service manual.

4. Voltage indications for PLAY and STOP modes on the schematics are as shown below:

< DVD Section >

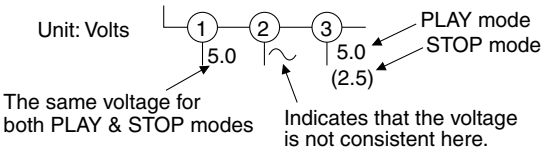

< TV Section >

Unit: Volts

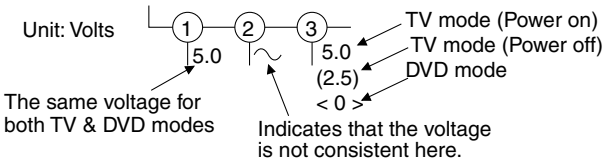

5. How to read converged lines

1-D3
- Distinction Area
- Line Number (1 to 3 digits)

Examples:
1. "1-D3" means that line number "1" goes to the line number "1" of the area "D3".
2. "1-B1" means that line number "1" goes to the line number "1" of the area "B1".

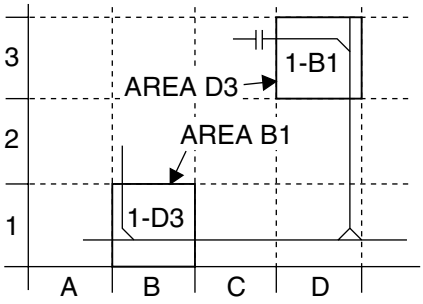

6. Test Point Information

: Indicates a test point with a jumper wire across a hole in the PCB.

: Used to indicate a test point with a component lead on foil side.

: Used to indicate a test point with no test pin.

: Used to indicate a test point with a test pin.

Main 1/7 Schematic Diagram ＜TV Section＞

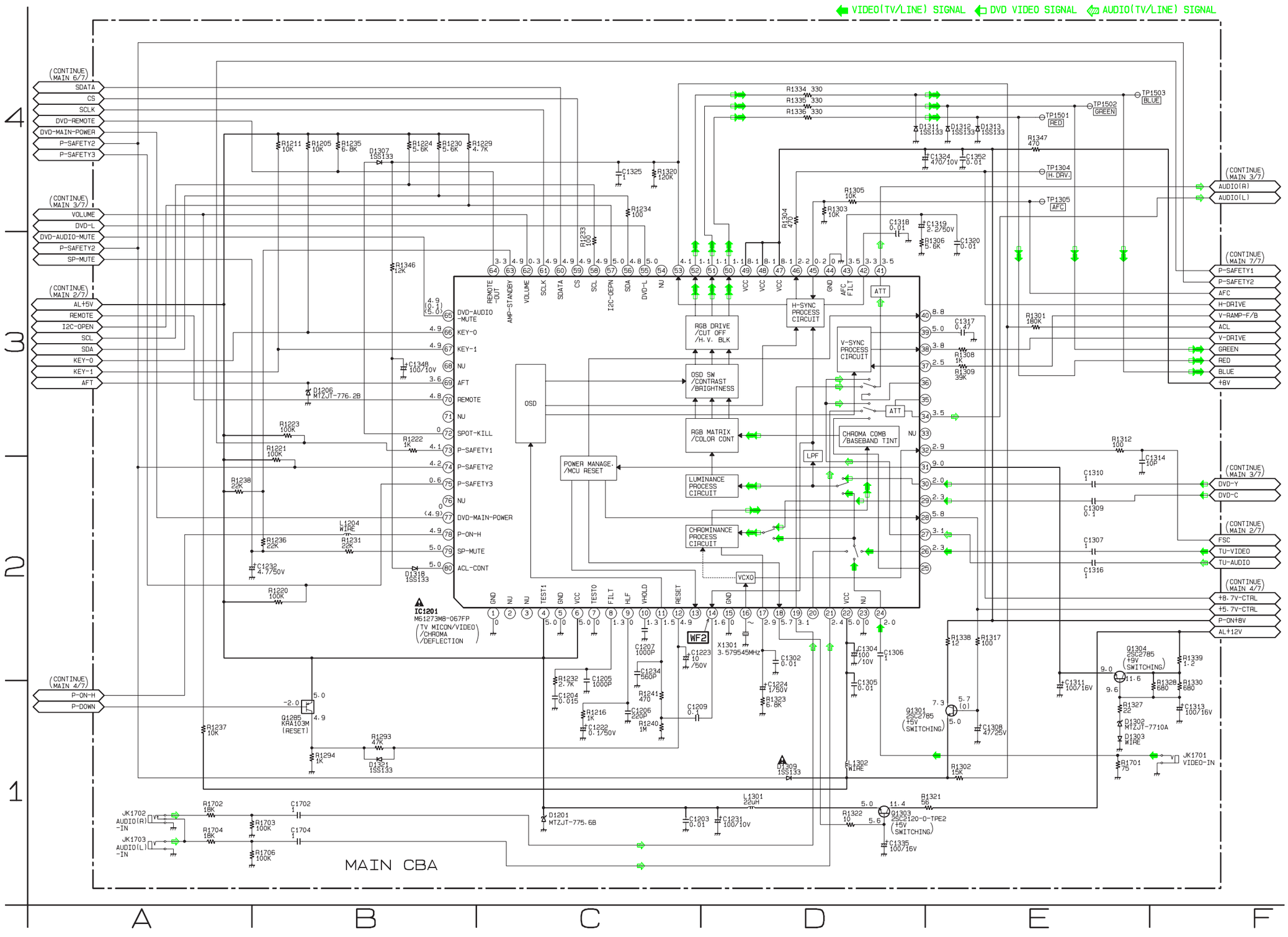

MAIN 1/7

Ref No.	Position
IC	
IC1201	B-2
TRANSISTORS	
Q1285	B-1
Q1301	E-1
Q1303	D-1
Q1304	E-2
TEST POINTS	
TP1304	E-4
TP1305	E-4
TP1501	E-4
TP1502	E-4
TP1503	F-4

Main 2/7 Schematic Diagram ＜TV Section＞

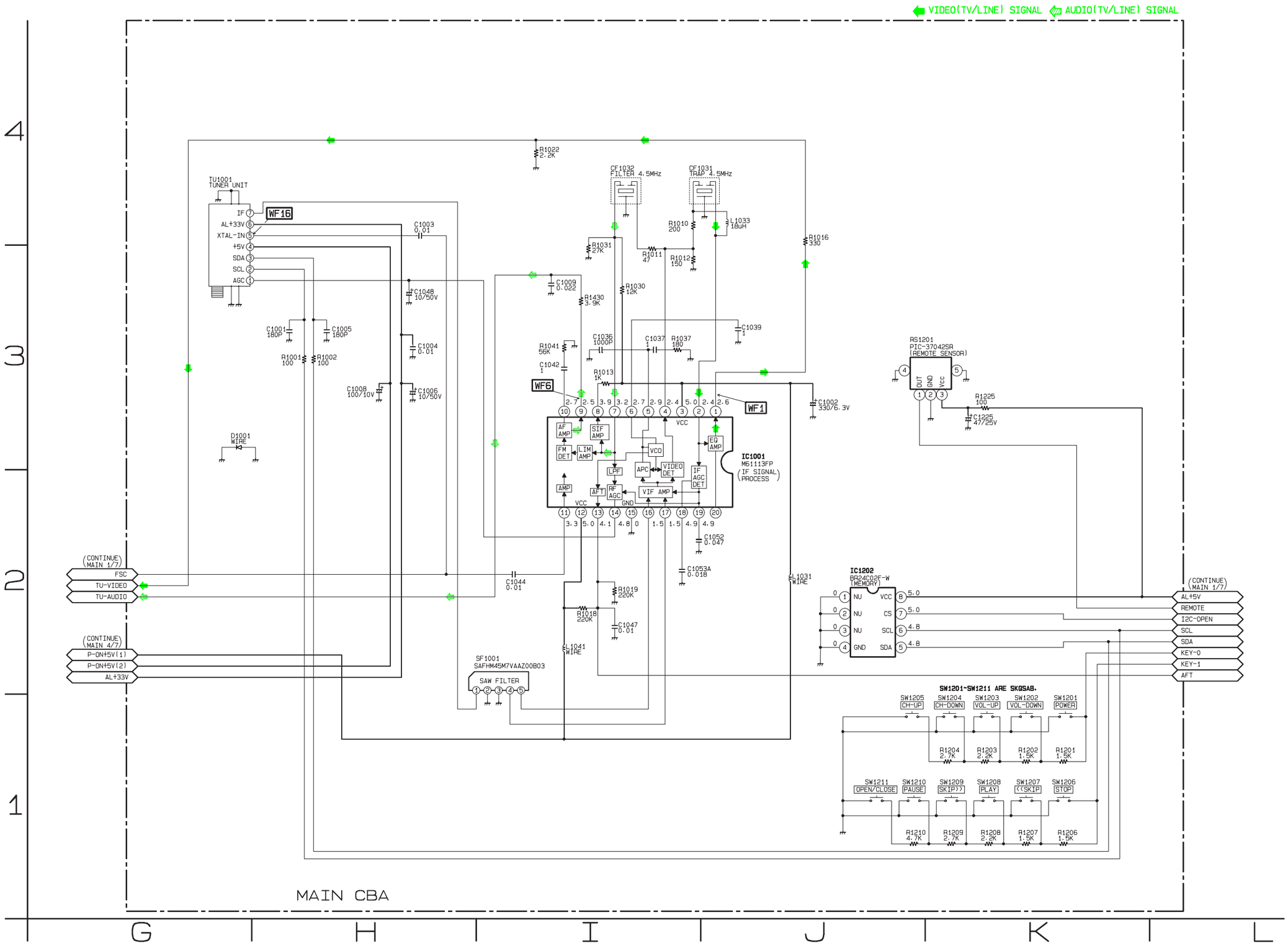

MAIN 2/7

Ref No.	Position
ICS	
IC1001	J-3
IC1202	J-2

Main 3/7 Schematic Diagram < TV Section >

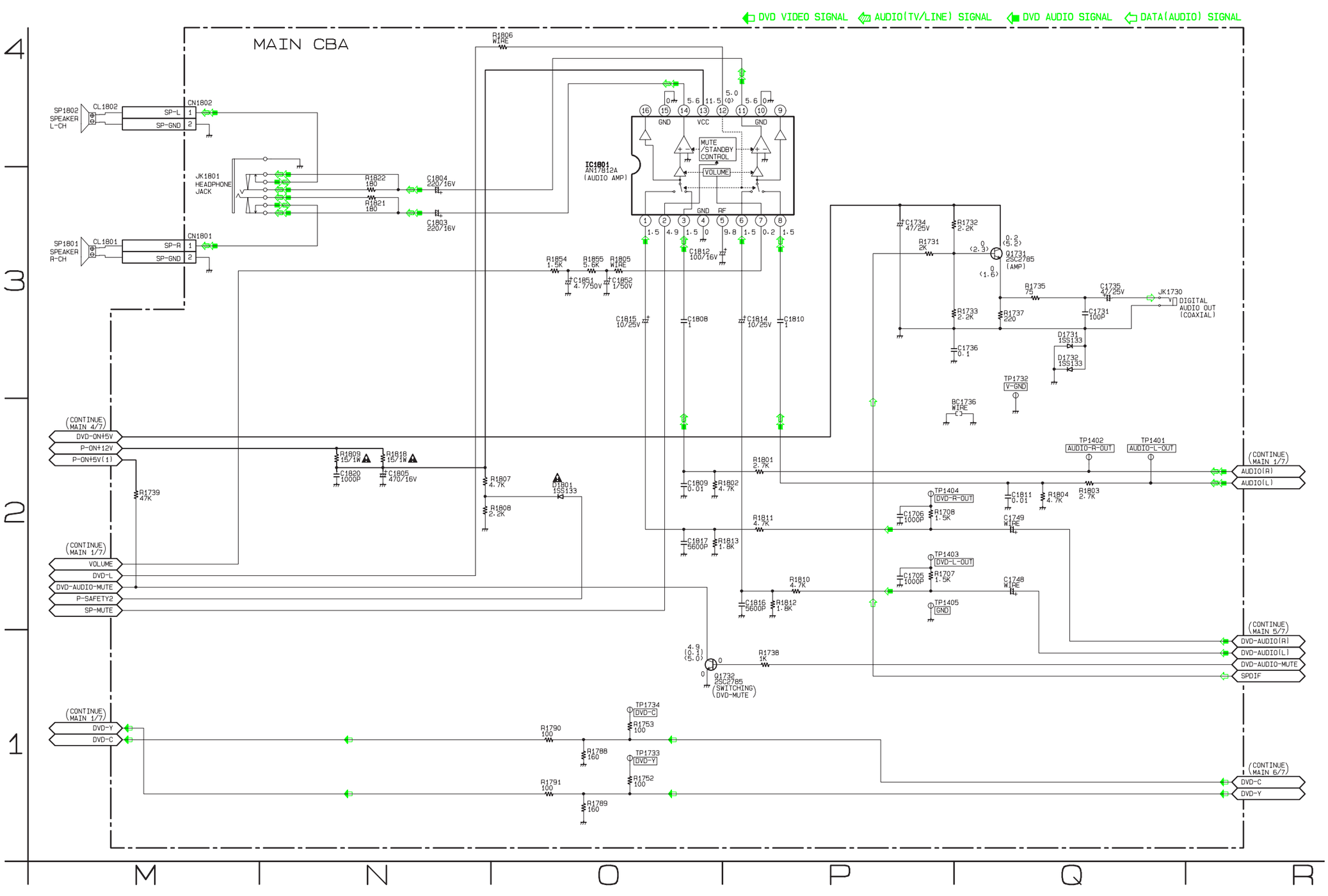

MAIN 3/7

Ref No.	Position
IC	
IC1801	O-3
TRANSISTORS	
Q1731	Q-3
Q1732	O-1
CONNECTORS	
CN1801	M-3
CN1802	M-4
TEST POINTS	
TP1401	Q-2
TP1402	Q-2
TP1403	P-2
TP1404	P-2
TP1405	P-2
TP1732	Q-3
TP1733	O-1
TP1734	O-1

Main 4/7 Schematic Diagram < TV Section >

CAUTION !
Fixed voltage (or Auto voltage selectable) power supply circuit is used in this unit.
If Main Fuse (F1601) is blown , check to see that all components in the power supply circuit are not defective before you connect the AC plug to the AC power supply.
Otherwise it may cause some components in the power supply circuit to fail.

4A 125V

CAUTION ! : For continued protection against risk of fire, replace only with same type 4 A, 125V fuse.
ATTENTION : Utiliser un fusible de rechange de même type de 4A, 125V.

NOTE:
The voltage for parts in hot circuit is measured using hot GND as a common terminal.

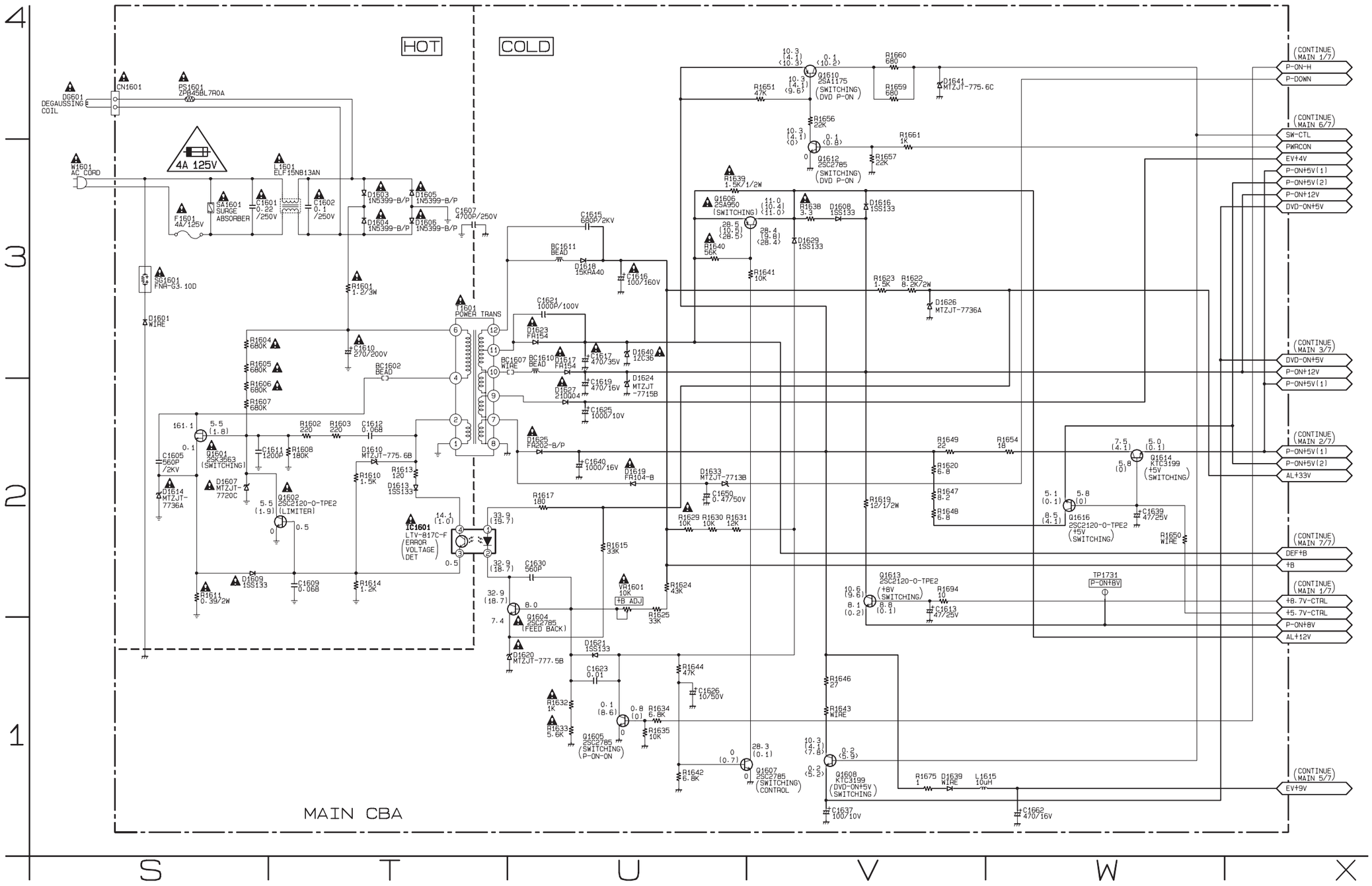

MAIN 4/7

Ref No.	Position
IC	
IC1601	T-2
TRANSISTORS	
Q1601	S-2
Q1602	T-2
Q1604	U-1
Q1605	U-1
Q1606	U-3
Q1607	V-1
Q1608	V-1
Q1610	V-4
Q1612	V-3
Q1613	V-2
Q1614	W-2
Q1616	W-2
CONNECTOR	
CN1601	S-4
TEST POINT	
TP1731	W-2
VARIABLE RESISTOR	
VR1601	U-2

T8100SCM4

Main 5/7 Schematic Diagram < TV Section >

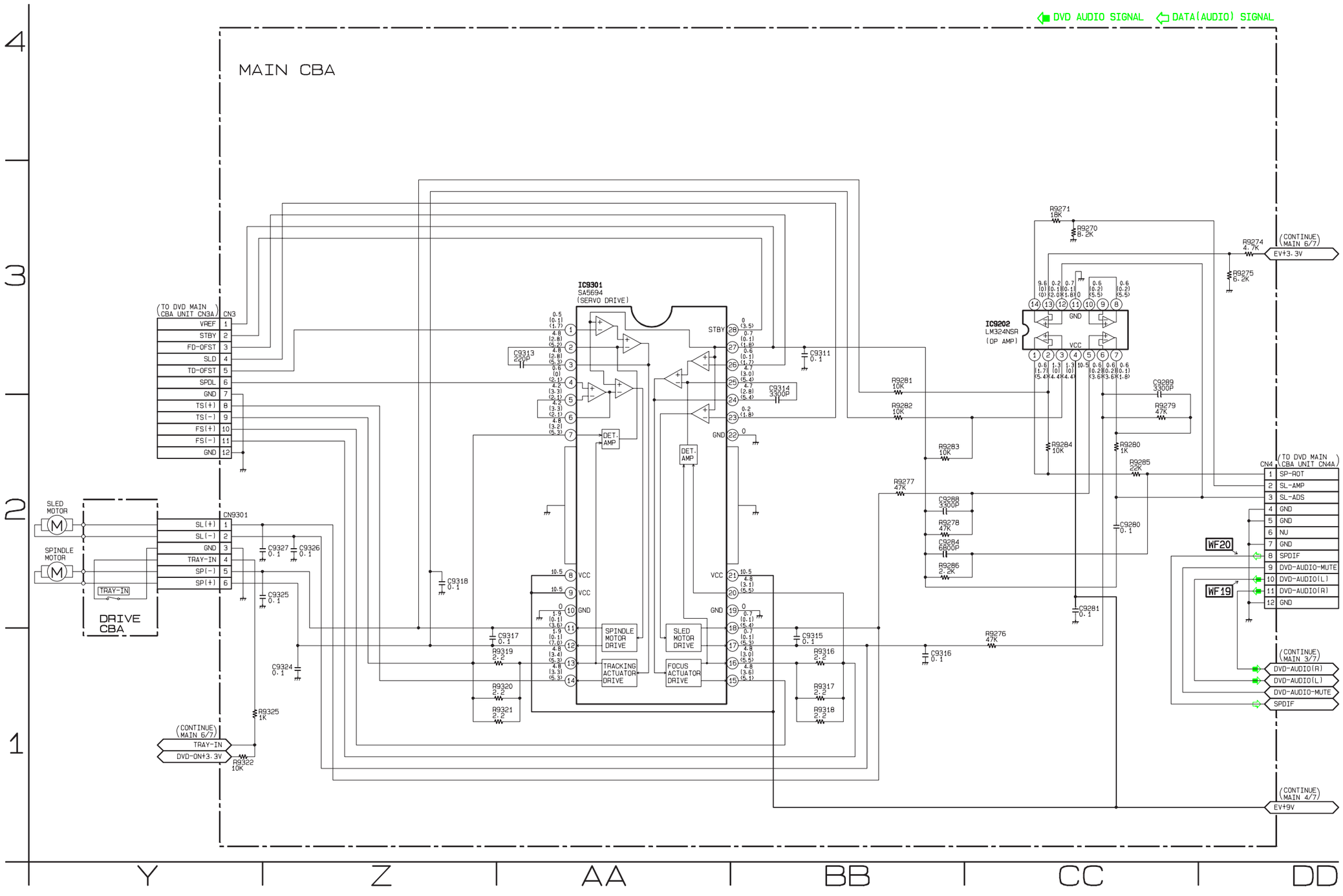

MAIN 5/7

Ref No.	Position
ICS	
IC9202	CC-3
IC9301	AA-3
CONNECTORS	
CN3	Y-3
CN4	DD-2
CN9301	Y-2

Main 6/7 Schematic Diagram < TV Section >

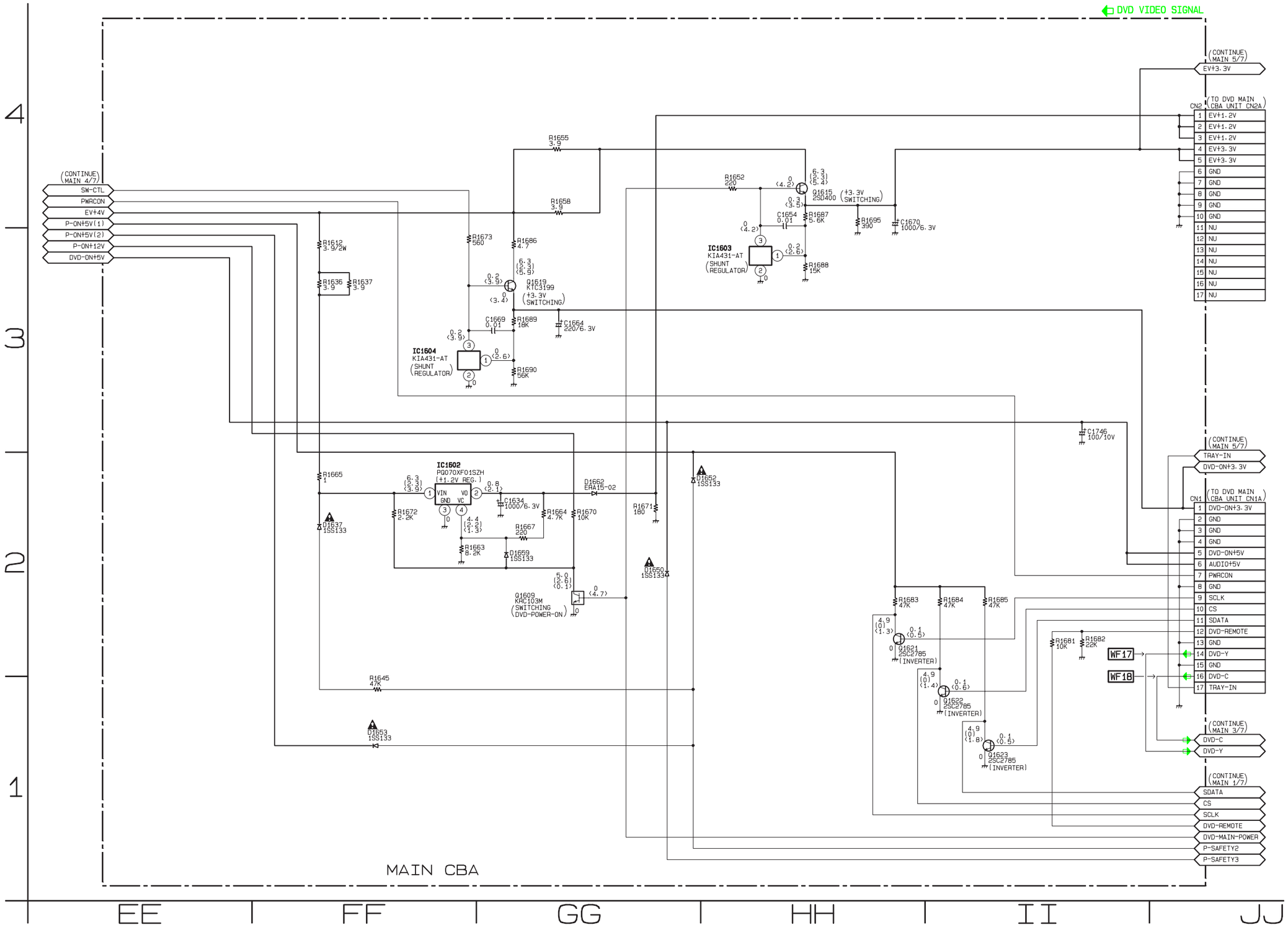

MAIN 6/7

Ref No.	Position
ICS	
IC1602	FF-2
IC1603	HH-3
IC1604	FF-3
TRANSISTORS	
Q1609	GG-2
Q1615	HH-4
Q1619	GG-3
Q1621	HH-2
Q1622	II-1
Q1623	II-1
CONNECTORS	
CN1	JJ-2
CN2	JJ-4

Main 7/7 & CRT Schematic Diagram < TV Section >

MAIN 7/7

Ref No.	Position
IC	
IC1551	KK-3
TRANSISTORS	
Q1571	MM-2
Q1572	LL-3
Q1591	LL-2
CONNECTORS	
CL1501	NN-2
CN1571	LL-3
TEST POINT	
J1160	MM-2

CRT

Ref No.	Position
TRANSISTORS	
Q2511	OO-1
Q2521	OO-2
Q2531	OO-2
CONNECTORS	
CL2501	NN-1
CN2505	PP-2

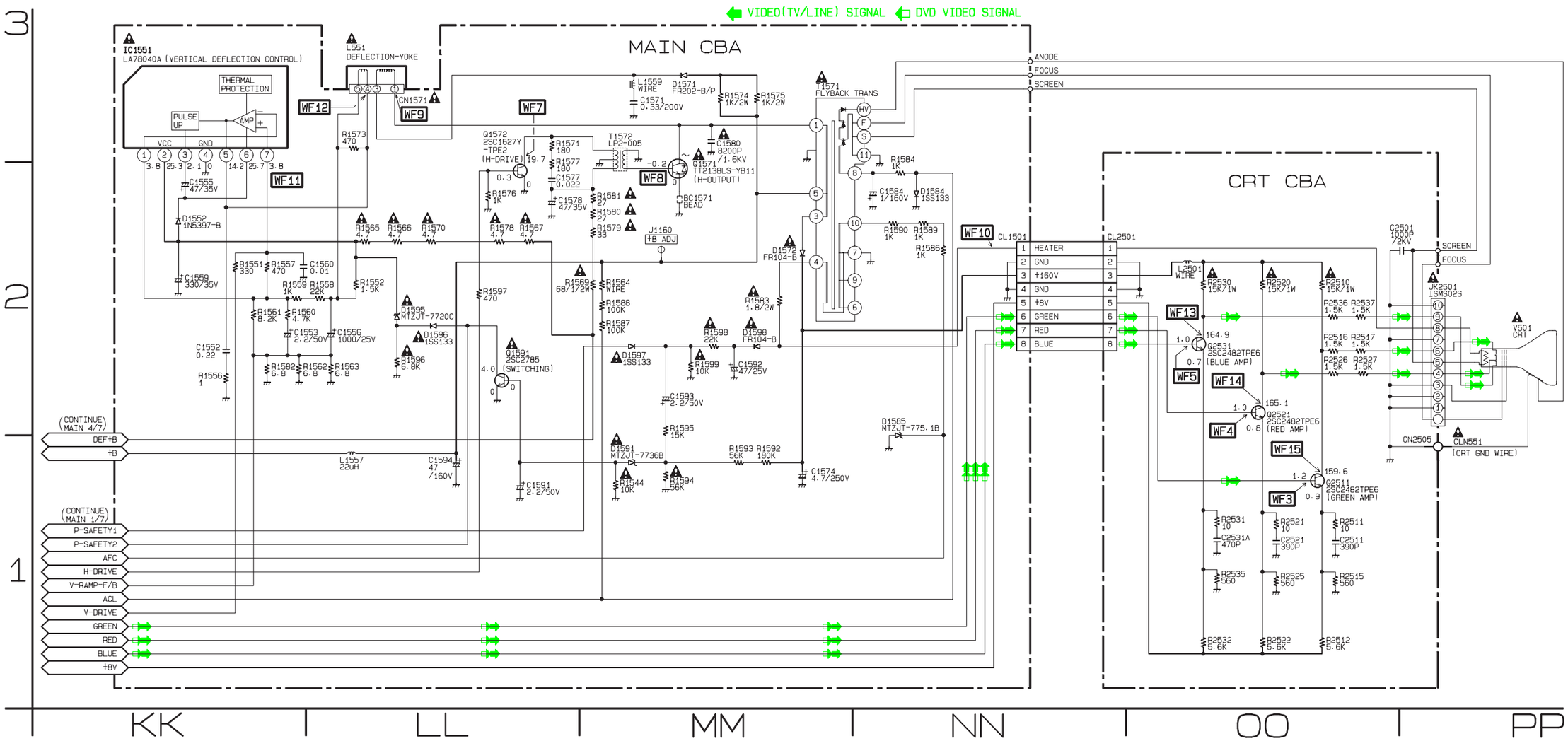

T8100SCM7

DVD Main 1/3 Schematic Diagram < DVD Section >

***1 NOTE:**
Either IC461 or IC462 is used for DVD MAIN CBA UNIT.

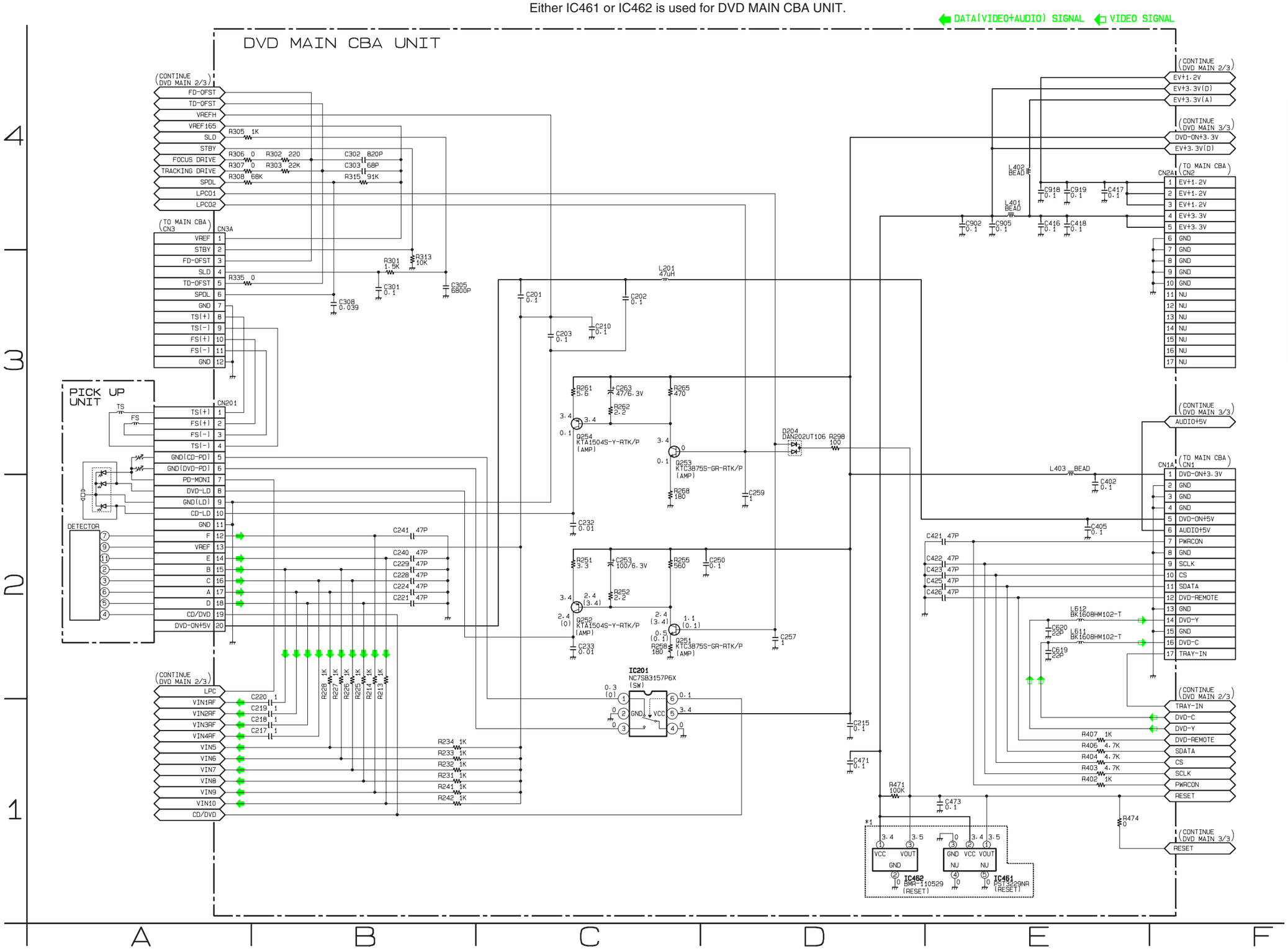

DVD MAIN 1/3

Ref No.	Position
ICS	
IC201	C-2
IC461	E-1
IC462	D-1
TRANSISTORS	
Q251	C-2
Q252	C-2
Q253	C-3
Q254	C-3
CONNECTORS	
CN1A	F-3
CN2A	F-4
CN3A	A-4
CN201	A-3

T8100SCD1

DVD Main 2/3 Schematic Diagram < DVD Section >

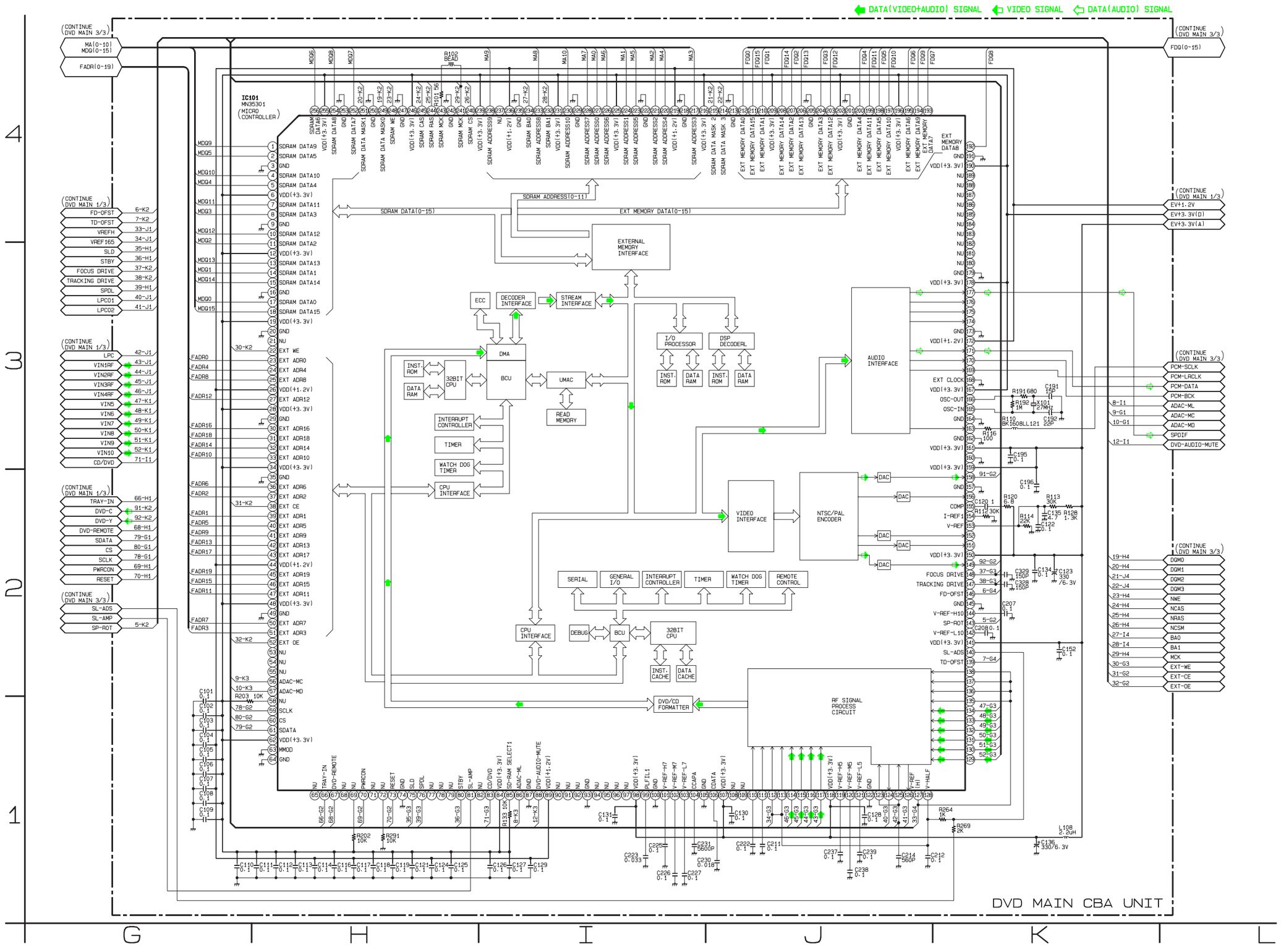

DVD MAIN 2/3

Ref No.	Position
IC	
IC101	G-4

T8100SCD2

IC101 Voltage Chart

~ : Voltage is not consistent ----- : Not used Unit : Volts

PIN.NO	PLAY	STOP	PIN.NO	PLAY	STOP	PIN.NO	PLAY	STOP	PIN.NO	PLAY	STOP	PIN.NO	PLAY	STOP	PIN.NO	PLAY	STOP	PIN.NO	PLAY	STOP	PIN.NO	PLAY	STOP
1	~	~	33	~	~	65	-----	-----	97	-----	-----	129	2.3	2.3	161	3.4	3.4	193	~	~	225	3.4	3.4
2	~	~	34	3.4	3.4	66	3.4	3.5	98	3.4	3.4	130	2.3	2.3	162	0	0	194	~	~	226	~	~
3	0	0	35	0	0	67	3.2	3.2	99	0.9	0.8	131	2.3	2.3	163	1.8	1.8	195	~	~	227	~	~
4	~	~	36	~	~	68	-----	-----	100	0	0	132	2.4	2.3	164	0	0	196	3.4	3.4	228	~	~
5	~	~	37	~	~	69	3.4	3.4	101	2.4	2.4	133	2.4	2.4	165	1.7	1.8	197	~	~	229	0	0
6	3.4	3.4	38	0.4	0.3	70	3.4	3.4	102	2.2	2.2	134	2.4	2.4	166	1.7	1.7	198	~	~	230	~	~
7	~	~	39	~	~	71	-----	-----	103	1.9	1.9	135	2.3	2.3	167	3.4	3.4	199	~	~	231	3.4	3.4
8	~	~	40	~	~	72	1.4	2.7	104	0.4	0.3	136	2.3	2.3	168	0	0	200	~	~	232	1.3	1.6
9	0	0	41	~	~	73	3.5	3.5	105	0	0	137	2.3	2.3	169	1.8	1.8	201	0	0	233	~	~
10	~	~	42	~	~	74	0	0	106	1.7	1.7	138	2.3	2.3	170	1.7	1.7	202	3.4	3.4	234	1.9	2.3
11	~	~	43	~	~	75	1.7	1.8	107	3.4	3.4	139	1.7	1.7	171	1.3	0.1	203	~	~	235	0	0
12	3.4	3.4	44	1.3	1.3	76	2.3	1.8	108	-----	-----	140	1.7	1.7	172	1.3	1.3	204	~	~	236	1.3	1.3
13	~	~	45	~	~	77	-----	-----	109	-----	-----	141	3.4	3.4	173	0	0	205	0	0	237	-----	-----
14	~	~	46	~	~	78	-----	-----	110	1.9	1.9	142	1.3	1.3	174	-----	-----	206	~	~	238	~	~
15	~	~	47	~	~	79	-----	-----	111	1.9	1.9	143	2.1	1.7	175	-----	-----	207	~	~	239	3.4	3.4
16	0	0	48	3.4	3.4	80	3.4	0	112	1.7	1.7	144	2.2	2.2	176	-----	-----	208	~	~	240	3.4	3.3
17	~	~	49	0	0	81	0.1	0.1	113	1.7	1.7	145	0	0	177	1.8	1.7	209	3.4	3.4	241	1.9	1.9
18	~	~	50	~	~	82	-----	-----	114	1.7	1.7	146	1.7	1.7	178	3.4	3.5	210	~	~	242	0	0
19	3.4	3.4	51	~	~	83	0.1	0.1	115	1.7	1.7	147	1.8	1.7	179	0	0	211	~	~	243	1.9	1.9
20	0	0	52	0.8	0.8	84	3.4	3.4	116	1.7	1.7	148	1.7	1.7	180	-----	-----	212	~	~	244	3.4	3.3
21	-----	-----	53	-----	-----	85	0.1	0.1	117	1.7	1.7	149	0.6	0.5	181	-----	-----	213	0	0	245	3.4	3.4
22	3.4	3.4	54	-----	-----	86	3.6	3.4	118	3.4	3.4	150	3.4	3.4	182	-----	-----	214	2.5	3.0	246	3.4	3.4
23	~	~	55	-----	-----	87	0	0	119	2.0	2.0	151	-----	-----	183	-----	-----	215	2.5	3.0	247	0	0
24	~	~	56	3.4	3.4	88	3.5	0.1	120	1.7	1.7	152	-----	-----	184	-----	-----	216	3.4	3.4	248	3.3	3.4
25	~	~	57	3.5	3.5	89	1.3	1.3	121	1.5	1.5	153	1.4	1.3	185	-----	-----	217	~	~	249	3.2	3.0
26	1.3	1.3	58	3.4	3.4	90	-----	-----	122	0	0	154	1.4	1.3	186	-----	-----	218	0	0	250	0	0
27	~	~	59	3.4	3.4	91	-----	-----	123	0.3	0.1	155	2.4	2.4	187	-----	-----	219	1.3	1.3	251	3.2	3.0
28	3.4	3.4	60	3.4	3.4	92	-----	-----	124	1.1	0.1	156	-----	-----	188	-----	-----	220	~	~	252	~	~
29	0	0	61	3.5	3.5	93	0	0	125	0.3	0.1	157	0	0	189	-----	-----	221	~	~	253	0	0
30	~	~	62	3.4	3.4	94	-----	-----	126	0.1	0.1	158	0.9	0.9	190	3.4	3.5	222	0	0	254	~	~
31	~	~	63	0	0	95	-----	-----	127	2.3	2.3	159	3.4	3.4	191	0	0	223	~	~	255	3.4	3.4
32	~	~	64	0	0	96	-----	-----	128	1.7	1.7	160	0	0	192	~	~	224	~	~	256	~	~

DVD Main 3/3 Schematic Diagram < DVD Section >

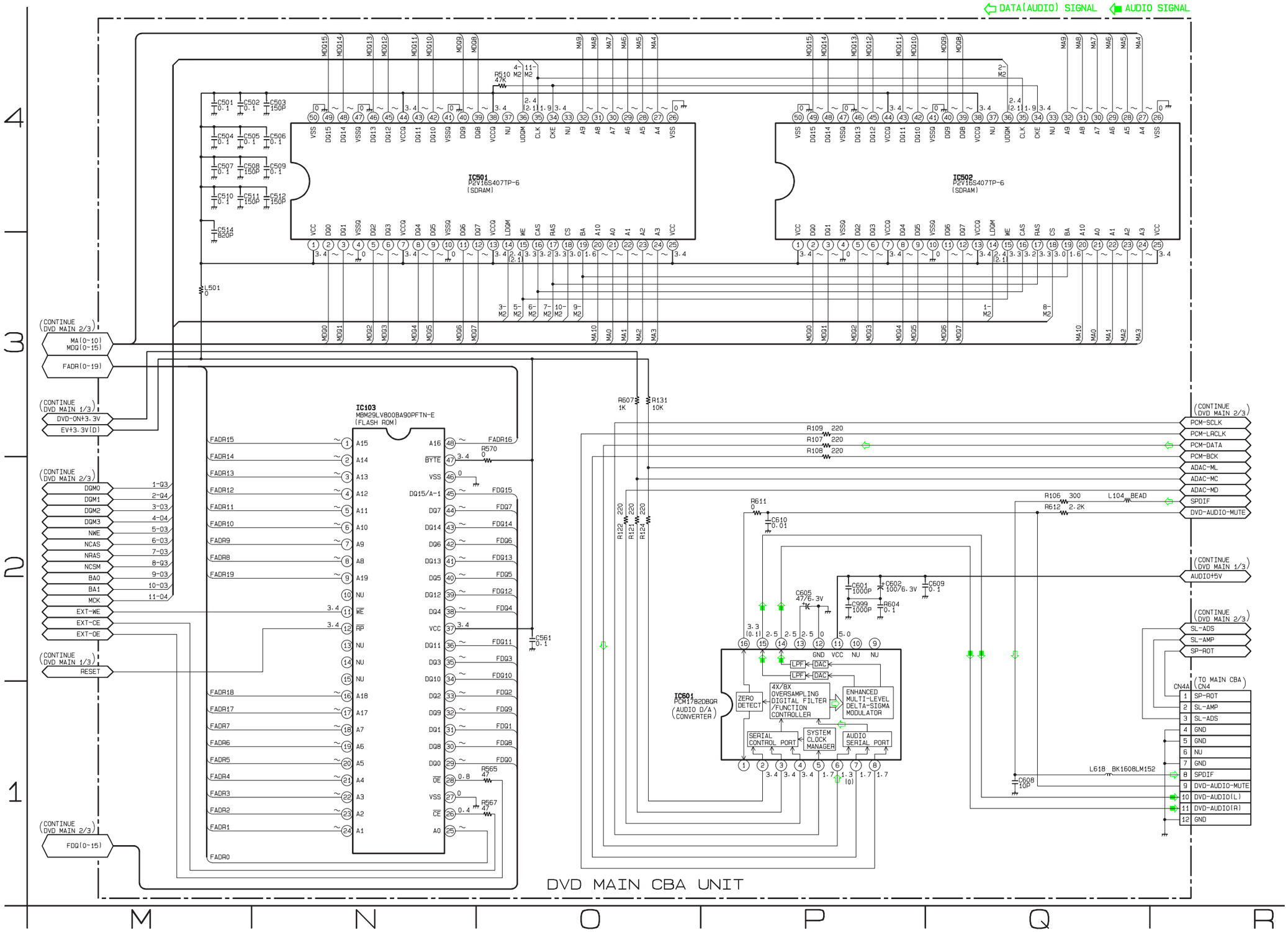

DVD MAIN 3/3

Ref No.	Position
ICS	
IC103	N-3
IC501	O-4
IC502	Q-4
IC601	O-1
CONNECTOR	
CN4A	R-1

T8100SCD3

Main CBA Top View < TV Section >

CAUTION !
Fixed voltage (or Auto voltage selectable) power supply circuit is used in this unit.
If Main Fuse (F1601) is blown , check to see that all components in the power supply circuit are not defective before you connect the AC plug to the AC power supply.
Otherwise it may cause some components in the power supply circuit to fail.

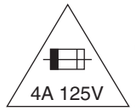

CAUTION ! : For continued protection against risk of fire, replace only with same type 4 A, 125V fuse.
ATTENTION : Utiliser un fusible de rechange de même type de 4A, 125V.

NOTE:
The voltage for parts in hot circuit is measured using hot GND as a common terminal.

Because a hot chassis ground is present in the power supply circuit, an isolation transformer must be used. Also, in order to have the ability to increase the input slowly,when troubleshooting this type power supply circuit, a variable isolation transformer is required.

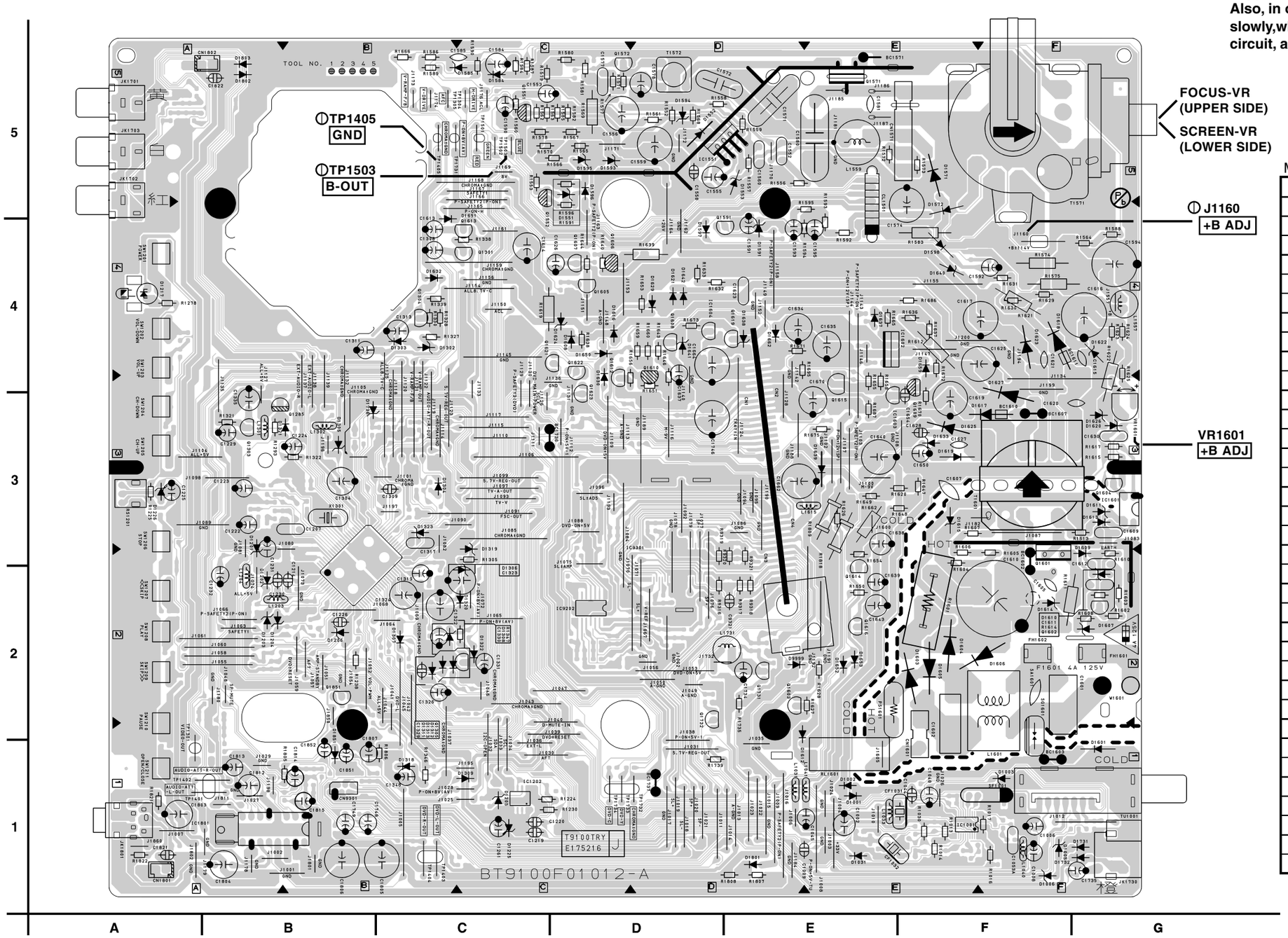

MAIN CBA

Ref No.	Position	Ref No.	Position
ICS		TRANSISTORS	
IC1001	F-1	Q1621	C-4
IC1201	B-3	Q1622	D-4
IC1202	C-1	Q1623	D-4
IC1551	D-5	Q1731	E-2
IC1601	G-3	Q1732	D-2
IC1602	F-4	CONNECTORS	
IC1603	E-3	CL1501	E-5
IC1604	C-3	CN1	E-3
IC1801	B-1	CN2	E-3
IC9202	D-2	CN3	E-3
IC9301	D-3	CN4	E-3
TRANSISTORS		CN1571	E-5
Q1285	B-3	CN1601	F-1
Q1301	C-4	CN1801	A-1
Q1303	B-3	CN1802	B-5
Q1304	C-4	CN9301	B-1
Q1571	E-5	TEST POINTS	
Q1572	D-5	J1160	F-4
Q1591	E-5	TP1304	C-5
Q1601	F-3	TP1305	C-5
Q1602	G-2	TP1401	A-1
Q1604	G-3	TP1402	A-1
Q1605	D-4	TP1403	C-1
Q1606	D-4	TP1404	C-1
Q1607	D-4	TP1405	C-5
Q1608	D-4	TP1501	C-5
Q1609	F-3	TP1502	C-5
Q1610	D-4	TP1503	C-5
Q1612	D-4	TP1731	C-5
Q1613	C-4	TP1732	D-1
Q1614	E-2	TP1733	D-1
Q1615	E-3	TP1734	D-1
Q1616	E-2	VARIABLE RESISTOR	
Q1619	E-4	VR1601	G-3

Main CBA Bottom View < TV Section >

CAUTION !
Fixed voltage (or Auto voltage selectable) power supply circuit is used in this unit.
If Main Fuse (F1601) is blown , check to see that all components in the power supply circuit are not defective before you connect the AC plug to the AC power supply.
Otherwise it may cause some components in the power supply circuit to fail.

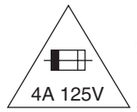

CAUTION ! : For continued protection against risk of fire, replace only with same type 4 A, 125V fuse.
ATTENTION : Utiliser un fusible de rechange de même type de 4A, 125V.

NOTE:
The voltage for parts in hot circuit is measured using hot GND as a common terminal.

Because a hot chassis ground is present in the power supply circuit, an isolation transformer must be used. Also, in order to have the ability to increase the input slowly,when troubleshooting this type power supply circuit, a variable isolation transformer is required.

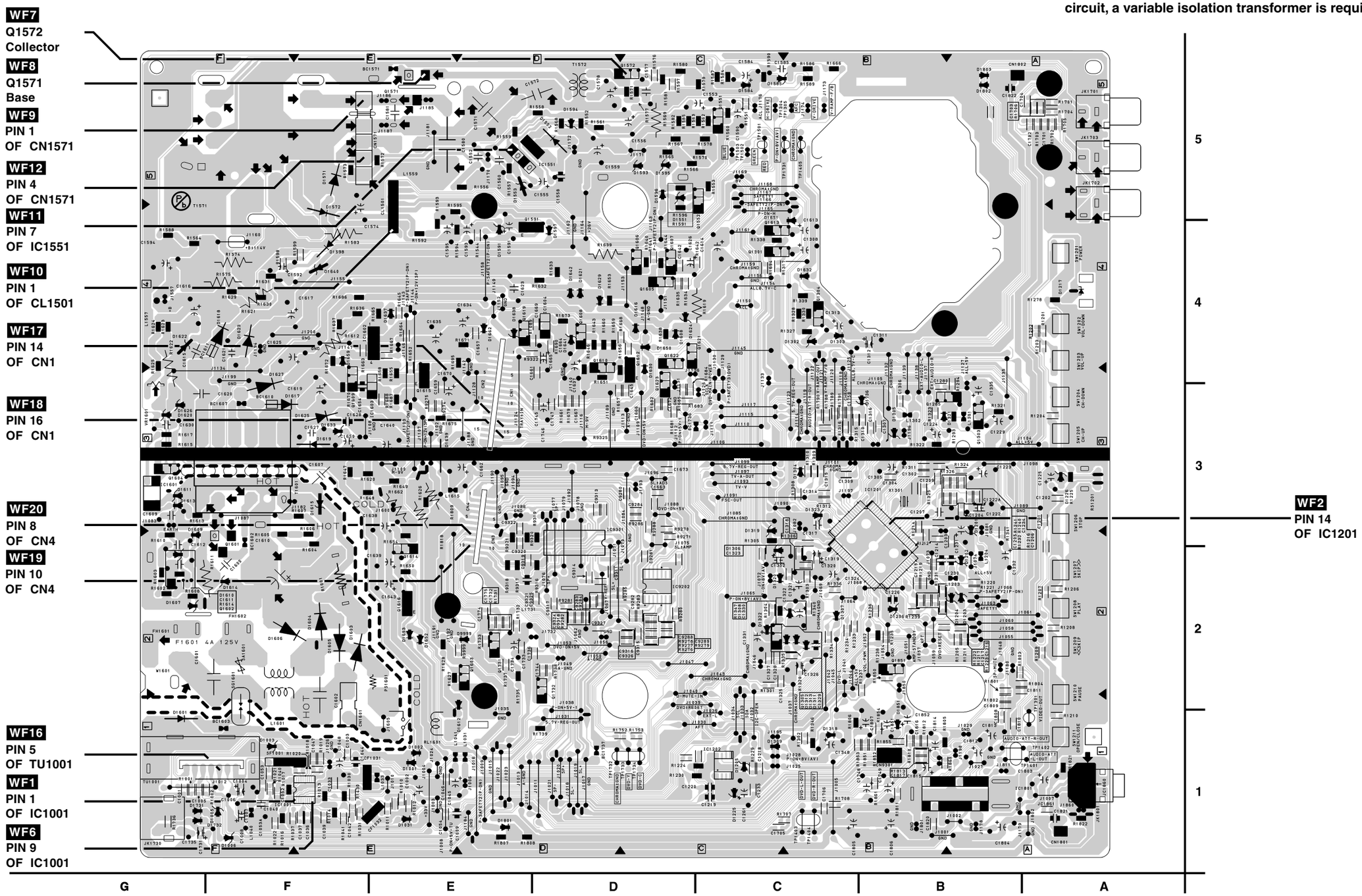

CRT CBA Top View < TV Section >

CRT CBA

Ref No.	Position
TRANSISTORS	
Q2511	A-2
Q2521	A-1
Q2531	B-2
CONNECTORS	
CL2501	B-2
CN2505	A-1

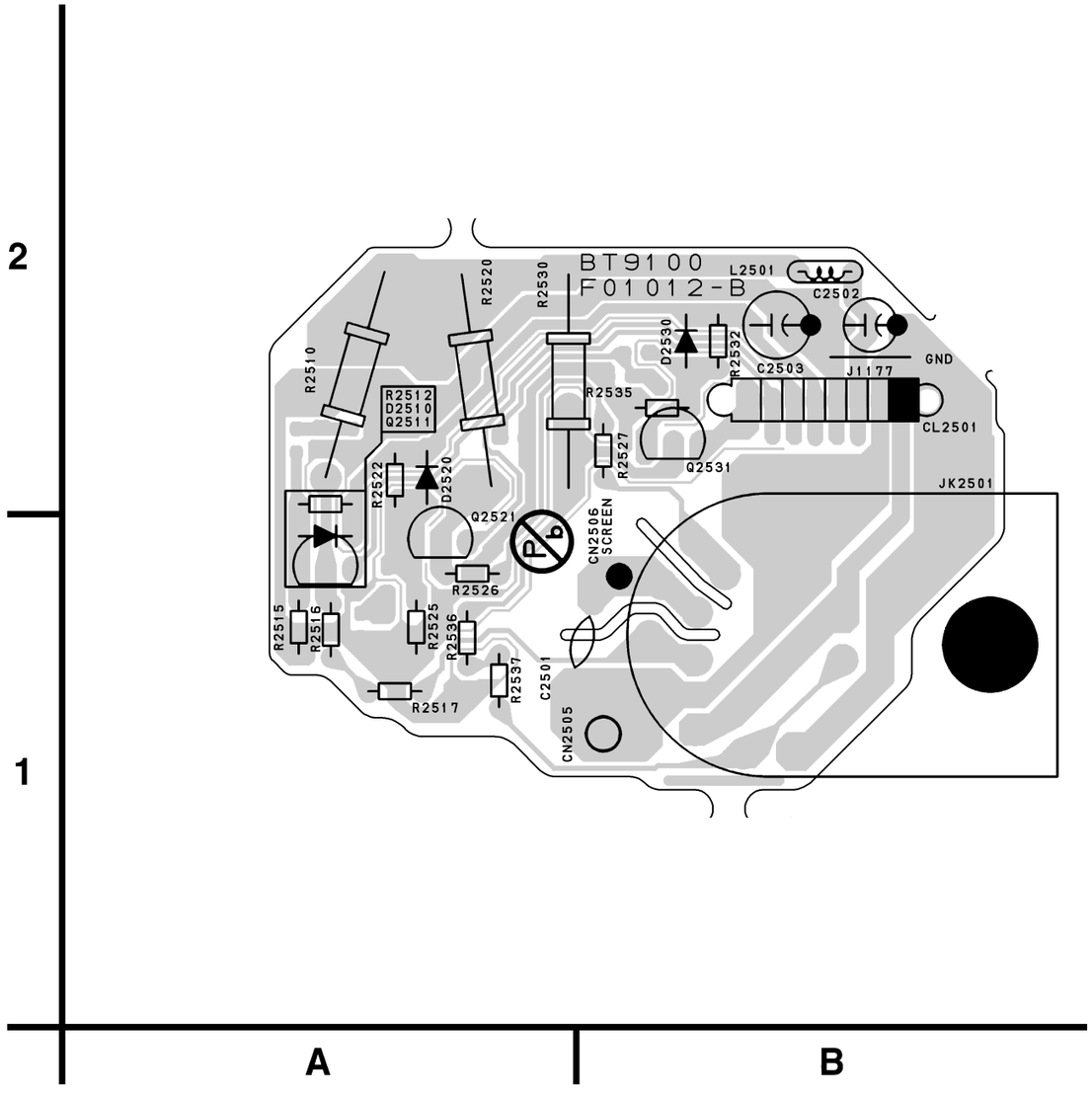

CRT CBA Bottom View < TV Section >

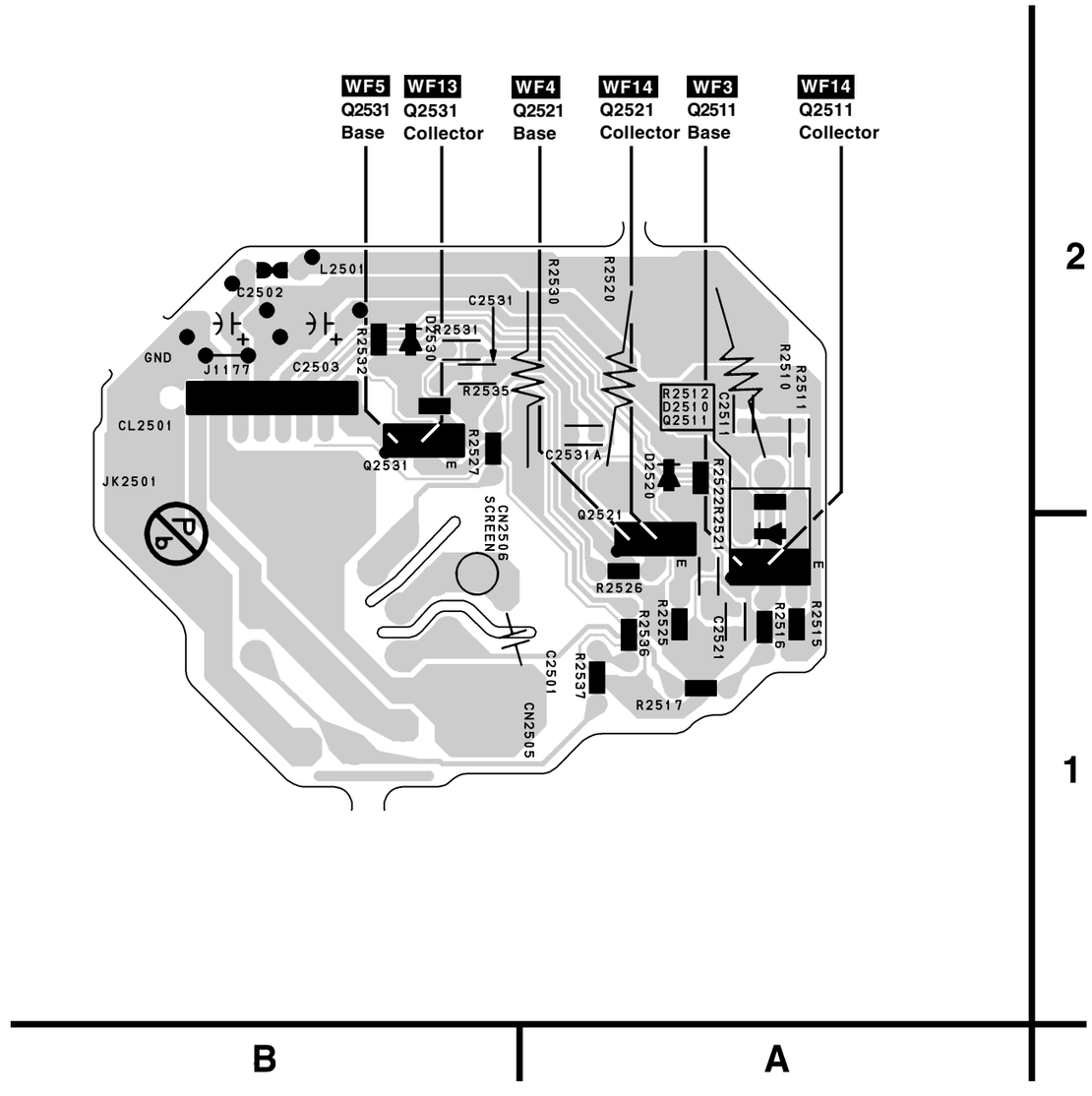

WAVEFORMS

Input: NTSC Color Bar Signal (with 1kHz Audio Signal) --- WF1~WF16
DVD Video (Power on (Stop) MODE) --- WF17, WF18
CD (1KHz Play) --- WF19, WF20
INITIAL POSITION: Unplug unit from AC outlet for at least five minutes, reconnect to AC outlet and then turn power on.

(Brightness---Center Color---Center Tint --- Center Contrast---Approx 70%)

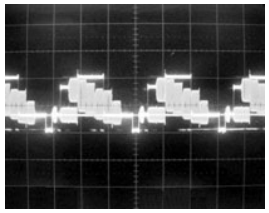

WF1 1DIV: 0.5V 20µs
IC1001 Pin 1

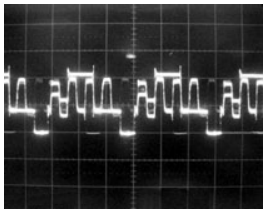

WF5 1DIV: 2V 20µs
Q2531 Base

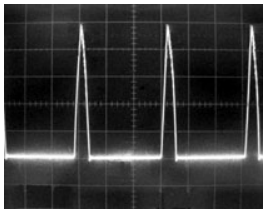

WF9 1DIV: 200V 20µs
CN1571 Pin 1

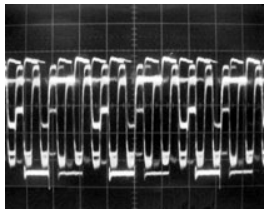

WF13 1DIV: 20V 20µs
Q2531 Collector

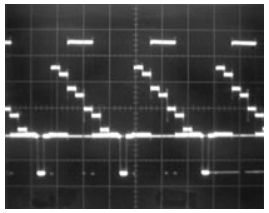

WF17 1DIV: 0.2V 20µs
CN1 Pin 14

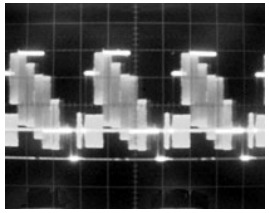

WF2 1DIV: 0.5V 20µs
IC1201 Pin 14

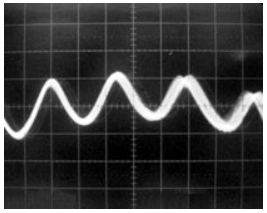

WF6 1DIV: 0.5V 5µs
IC1001 Pin 9

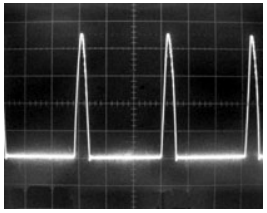

WF10 1DIV: 5V 20µs
CL1501 Pin 1

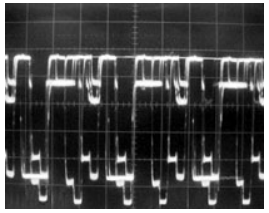

WF14 1DIV: 20V 20µs
Q2521 Collector

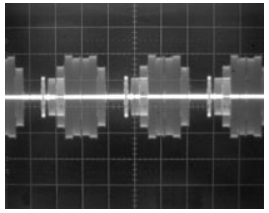

WF18 1DIV: 0.2V 20µs
CN1 Pin 16

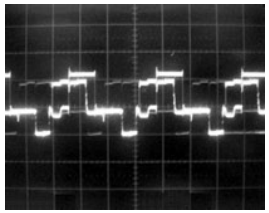

WF3 1DIV: 2V 20µs
Q2511 Base

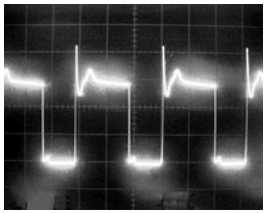

WF7 1DIV: 10V 20µs
Q1572 Collector

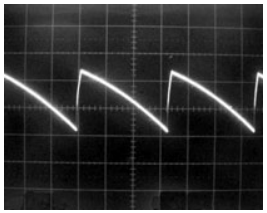

WF11 1DIV: 1V 5ms
IC1551 Pin 7

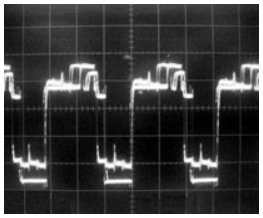

WF15 1DIV: 20V 20µs
Q2511 Collector

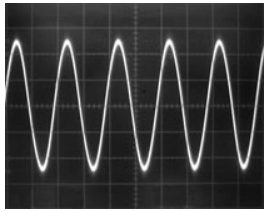

WF19 1DIV: 1V 0.5ms
CN4 Pin 10

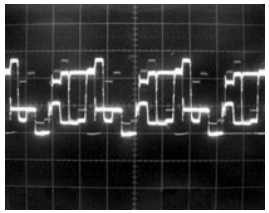

WF4 1DIV: 2V 20µs
Q2521 Base

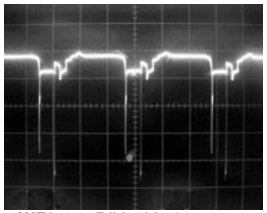

WF8 1DIV: 5V 20µs
Q1571 Base

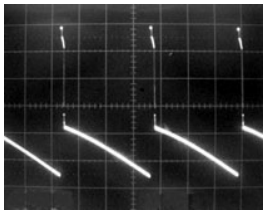

WF12 1DIV: 10V 5ms
CN1571 Pin 4

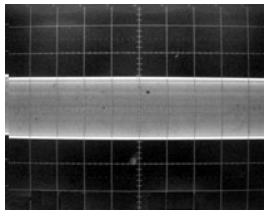

WF16 1DIV: 0.2V 20µs
TU1001 Pin 5

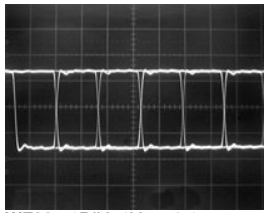

WF20 1DIV: 1V 0.1µs
CN4 Pin 8

WIRING DIAGRAM

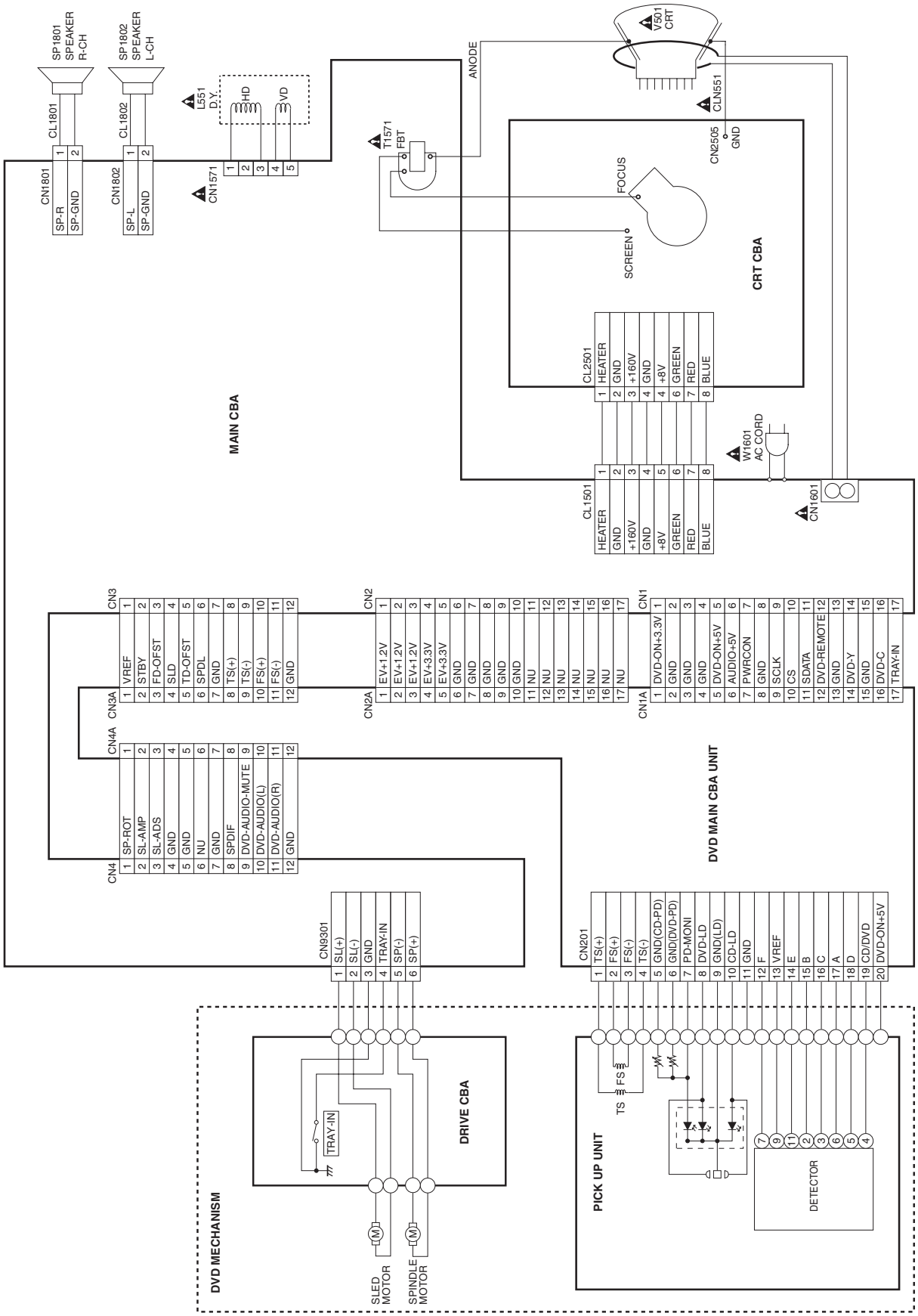

SYSTEM CONTROL TIMING CHARTS

Tray Close ~ Play / Play ~ Tray Open

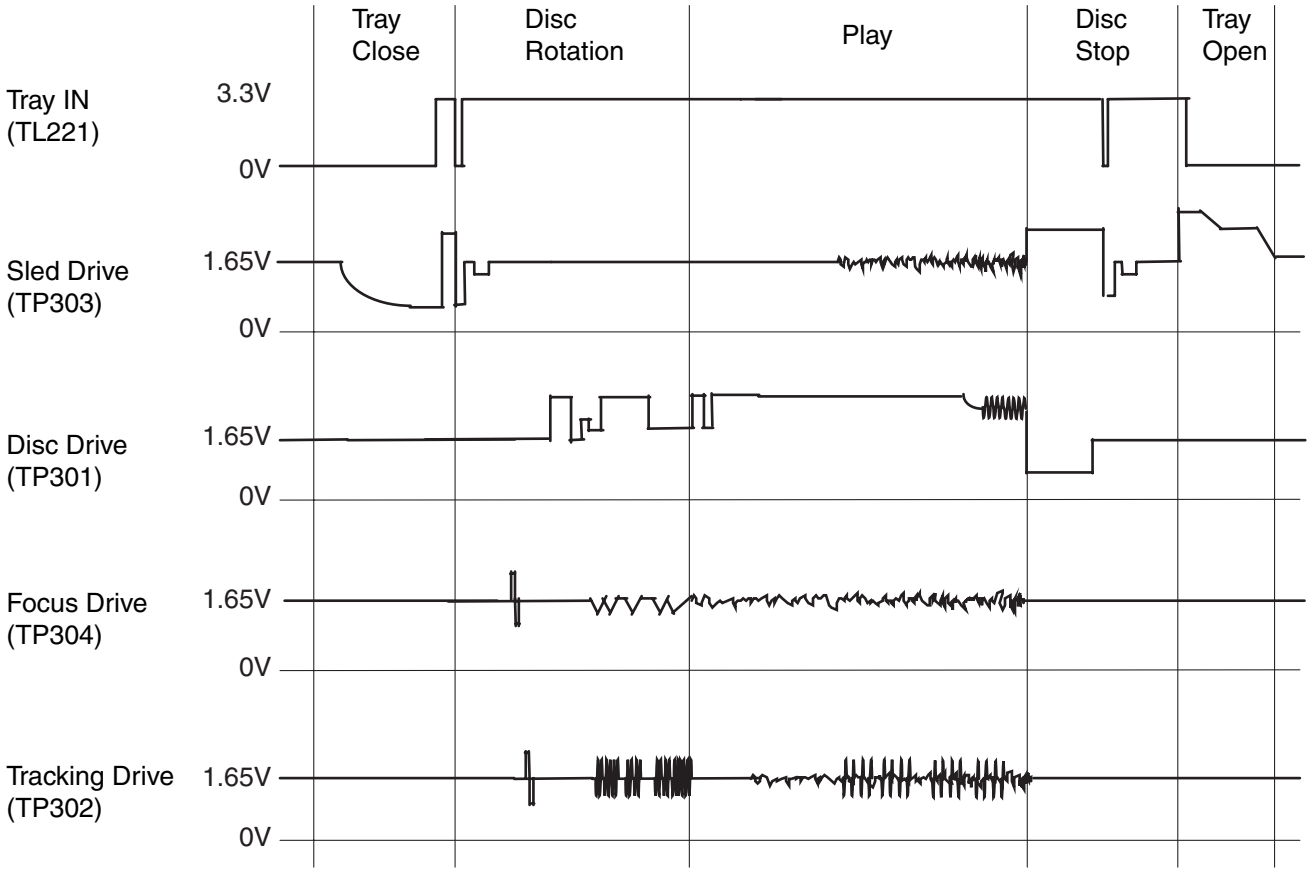

IC PIN FUNCTIONS

IC1201 (TV Micro Controller)

Pin No.	Signal Name	Function
1	GND	GND
2	N.U.	Not Used
3	N.U.	Not Used
4	TEST1	TEST 1
5	GND	GND
6	VCC	AL+5V
7	TEST 0	TEST 0
8	FILT	FILT
9	HLF	Filter for CCD
10	VHOLD	VHOLD
11	CVIN	Input for Video Signal
12	RESET	RESET
13	N.U.	Not Used
14	VIDEO LINE OUT	Composite Signal Output
15	GND	GND
16	3.58 X'TAL	3.58MHz Crystal
17	C-APC	CHROMINANCE APC
18	5.7V REG OUT	5.7V Output
19	AUX2(R)IN	AUX Audio R Input
20	N.U.	Not Used
21	AUX2(L)IN	AUX Audio L Input
22	VCC	VCC
23	N.U.	Not Used
24	CVBS IN2	Composite Signal Input 2 (LINE)
25	AUX1(L)IN	DVD Audio L Input
26	CVBS IN1	Composite Signal Input 1 (TUNER)
27	AU MONO IN	Audio Input (TUNER)
28	5.7V REG OUT	5.7V Output
29	C IN	DVD Chrominance Signal
30	Y IN	DVD Luminance Signal
31	V REG VCC	DC 8.7V Input
32	FSC OUT	Clock Output 3.58MHz
33	N.U.	Not Used
34	AUDIO ATT OUT(L)	Audio Output L
35	AUDIO ATT FILTER	Audio Filter
36	AUX1(R)IN	DVD Audio Input R
37	V RAMP F/B	V Ramp Feed Back
38	V RAMP OUT	Vertical Output
39	V RAMP CAP	V Ramp OSC Capacitor
40	8.7V REG OUT	8.7V Output
41	AUDIO ATT OUT(R)	Audio Output R
42	H VCO F/B	H Vco Feed Back
43	AFC FILT	Horizontal AFC Filter
44	GND	GND
45	FBP IN	Flyback Pulse Input
46	H-OUT	H Pulse Output
47	VCC	Vcc
48	VCC	Vcc
49	VCC	Vcc
50	R OUT	Red Output
51	G OUT	Green Output
52	B OUT	Blue Output
53	ACL	IB-Input
54	N.U.	Not Used
55	DVD-L	DVD at Low
56	SDA	I2C-BUS Controller Interface (Data)
57	I2C-OPEN	White Balance Adjustment Judgement
58	SCL	I2C-BUS Controller Interface (Clock)
59	CS	DVD Interface Chip Select
60	SDATA	DVD Interface Data
61	SCLK	DVD Interface Clock
62	VOLUME	Volume Control
63	AMP-STANDBY	Speaker Amp. ON/OFF Output Signal
64	REMOTE-OUT	DVD Control Key Code Output

Pin No.	Signal Name	Function
65	DVD-AUDIO-MUTE	DVD Mute Signal Input
66	KEY-0	Key Input 0
67	KEY-1	Key Input 1
68	N.U.	Not Used
69	AFT	AFT Voltage Input
70	REMOTE	Input for Remote Control
71	N.U.	Not Used
72	SPOT-KILL	Spot Countermeasure
73	P-SAFETY 1	Power Supply Protection
74	P-SAFETY 2	Power Supply Protection
75	P-SAFETY 3	Power Supply Protection
76	N.U.	Not Used
77	DVD-MAIN-POWER	Power On Signal to High for DVD
78	P-ON-H	Output for P-ON-H
79	SP-MUTE	Audio Mute Signal
80	ACL-CONT	ACL Control Signal

LEAD IDENTIFICATIONS

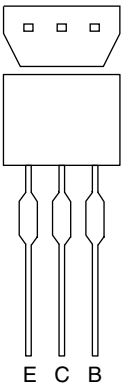

2SC2785(F)
KRA103M
KRC103M
KTC3199(GR)

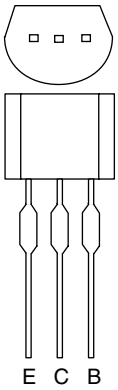

2SA1175(F)
2SA950(O)
2SC1627Y-TPE2
2SC2120-O-TPE2
2SC2482 TPE6
2SD400(F)

BR24C02F-W

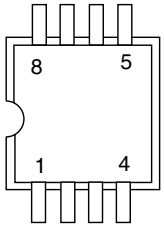

2SK3563

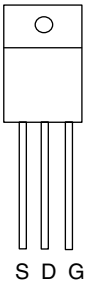

S: Souce
D: Drain
G: Gate

LA78040A

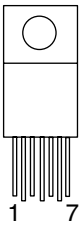

KIA431-AT

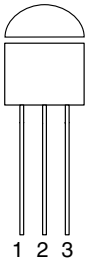

1: R
2: A
3: K

LTV-817C-F

1: A
2: K
3: E
4: C

AN17812A

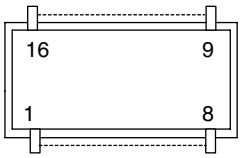

PQ070XF01SZH

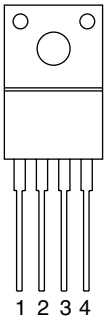

1: Vin
2: Vo
3: GND
4: Vc

M61273M8-067FP

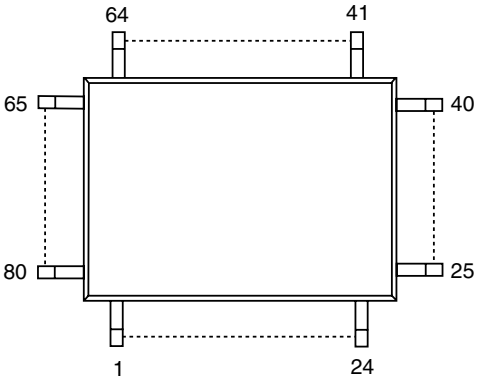

M61113FP

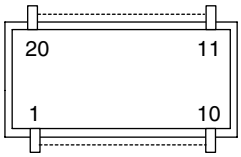

TT2140LS-YB11

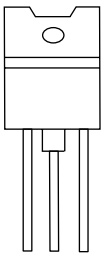

LM324NSR

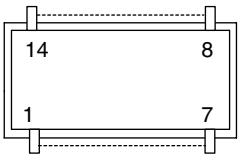

SA5694

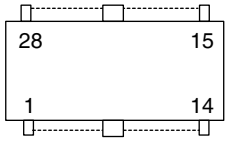

Note:
A: Anode
K: Cathode
E: Emitter
C: Collector
B: Base
R: Reference
S: Source
G: Gate
D: Drain

EXPLODED VIEWS

Cabinet

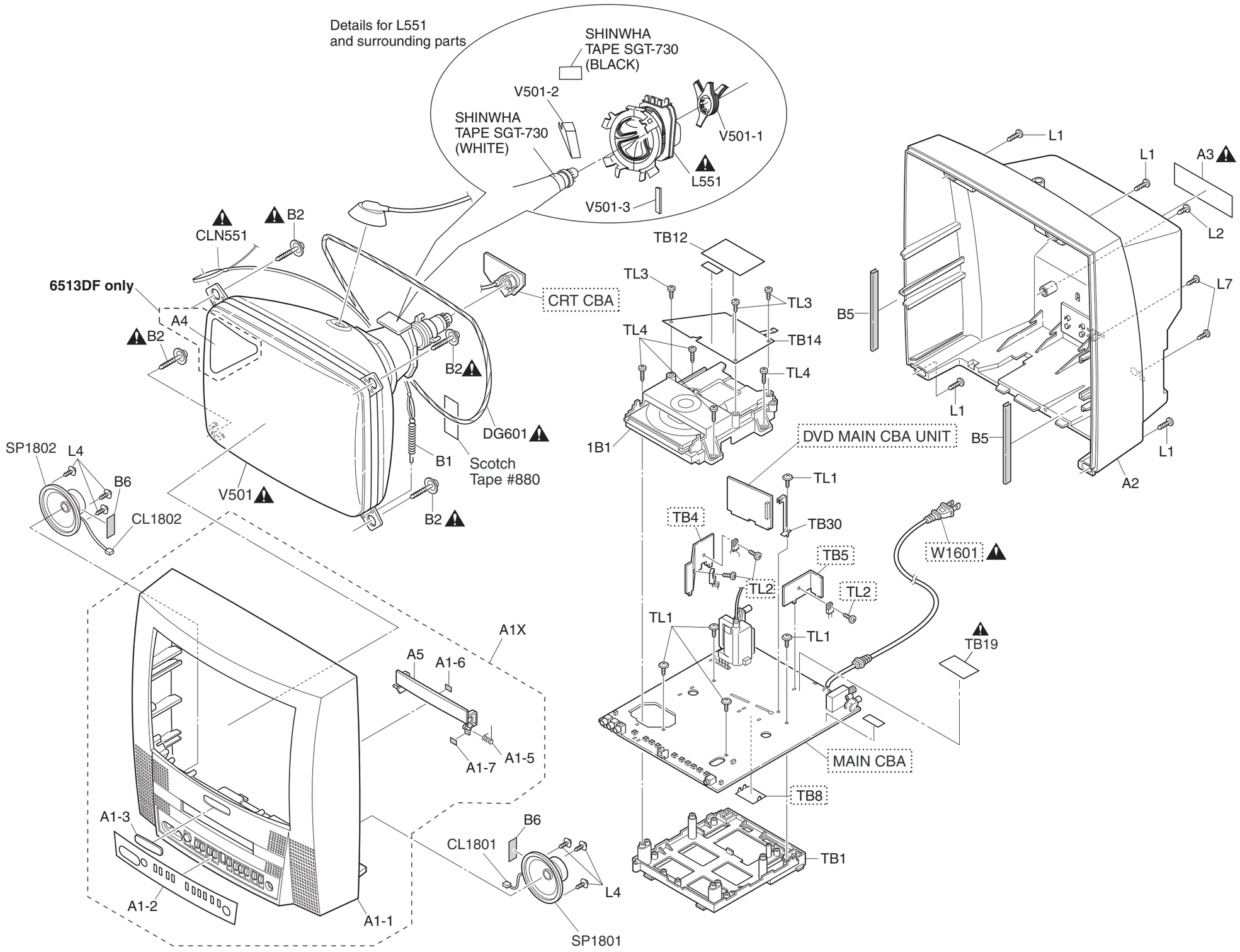

Packing

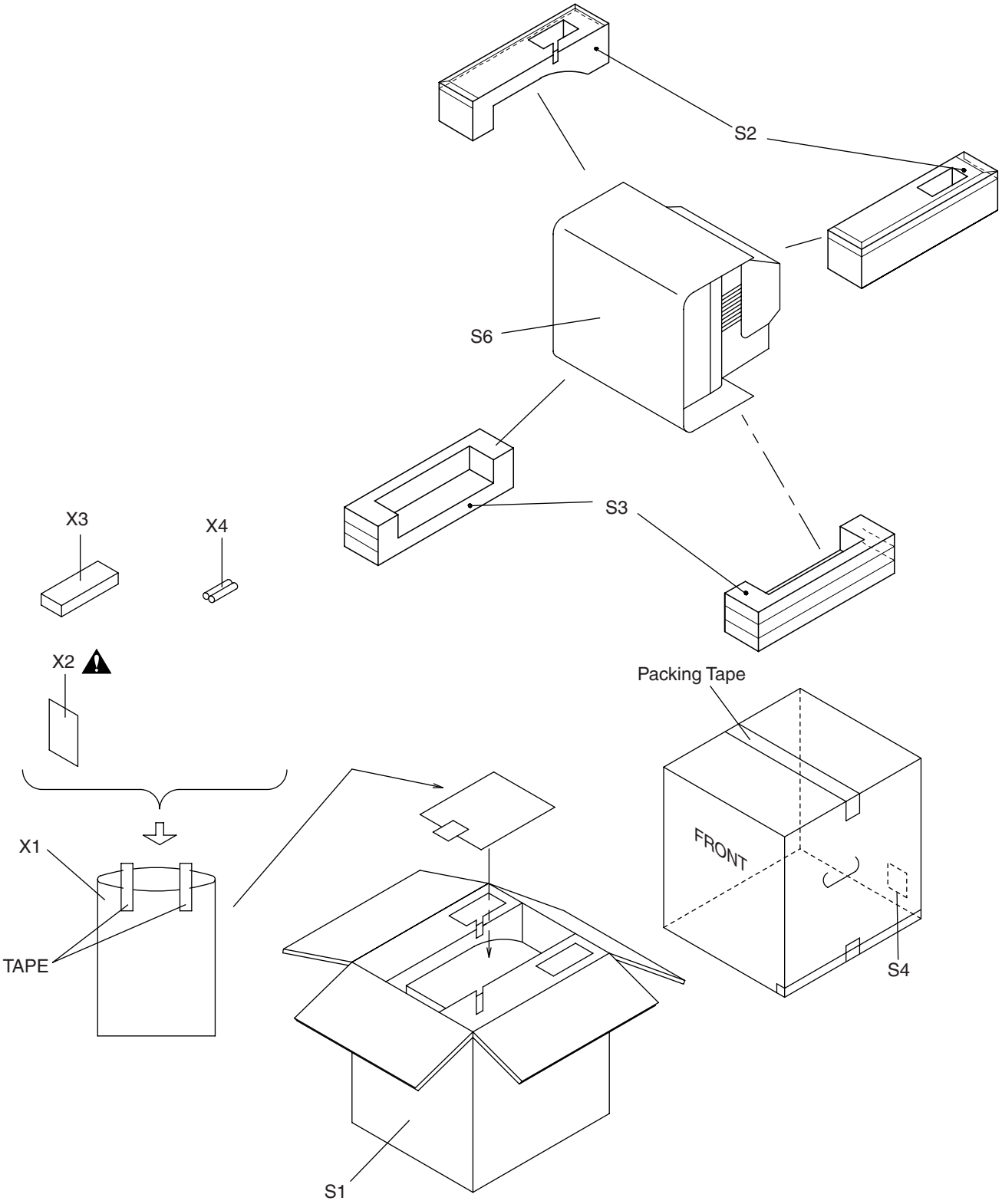

MECHANICAL PARTS LIST

PRODUCT SAFETY NOTE: Products marked with a ⚠ have special characteristics important to safety. Before replacing any of these components, read carefully the product safety notice in this service manual. Don't degrade the safety of the product through improper servicing.

NOTE: Parts that are not assigned part numbers (---------) are not available.

Comparison Chart of Models and Marks

Model	Mark
6513DF	A
SC513DF	B

Ref. No.	Mark	Description	Part No.
A1X	A	FRONT CABINET ASSEMBLY T8100UA	1EM120119
A1X	B	FRONT CABINET ASSEMBLY T8107UH	1EM120190
A1-1		FRONT CABINET T8100UA	1EM020128
A1-2		CONTROL PLATE T8100UA	1EM320184
A1-3	A	BRAND PLATE T8100UA	1EM420762
A1-3	B	BRAND PLATE T1101UB	1EM420833
A1-5		TRAY SPRING TD707UH	0EM408552
A1-6		CLOTH(B) L5201U0 15X10X1.0T	0EM400076
A1-7		CLOTH(4X7X0.3T) TD250UA	0EM407578
A2		REAR CABINET T8100UA	1EM020130
A3⚠	A	RATING LABEL T8100UA	---------
A3⚠	B	RATING LABEL T8107UH	---------
A4	A	POP LABEL T8100UA	---------
A5		TRAY PANEL T8051UB	1EM420413
1B1		DVD MECHANIZM E6(S-COMBO) N79U1JVM	N79U1JVM
B1		SPRING TENSION B0080B0 EM40808	26WH006
B2⚠		M5 CRT SCREW(B) B4000UA	0VM403923
B5		CLOTH 190X15XT0.5	TS7623
B6		CLOTH(10X30XT0.5) B5900UA	0EM404486
CL1801		WIRE ASSEMBLY SPEAKER WIRE(180MM)	WX1L9800-001
CL1802		WIRE ASSEMBLY SPEAKER WIRE(180MM)	WX1L9800-001
CLN551 ⚠		CRT GND WIRE	WX1L7720-001
DG601 ⚠		DEGAUSSING COIL F-019	LLBH00ZTM019
L1		SCREW P-TIGHT 4X18 BIND HEAD +	GBMP4180
L2		SCREW TAPPING M4X14	DBU14140
L4		SCREW ASSEMBLED 12 M3X12	0EM406746
L7		SCREW P-TIGHT 3X10 BIND HEAD+	GBKP3100
SP1801		SPEAKER S08F02B	DSD0808XQ010
SP1802		SPEAKER S08F02B	DSD0808XQ010
TB1		LOADER TRAY T8100UA	1EM120095
TB12		LABEL LASER CAUTION T8100UA	---------
TB14		X6 LOADER COVER(B) T8100UA	1EM320252
TB19⚠		13V CHASSIS NO. LABEL TJ T8100UA	---------
TB30		LOADER PCB HOLDER T8100UA	1EM420626
TL1		SCREW P-TIGHT 3X12 WASHER HEAD+	GCMP3120
TL3		P-TIGHT SCREW 3X8 BIND +	GBMP3080
TL4		SCREW P-TIGHT 3X16 BIND HEAD +	GBMP3160
PACKING			
S1	A	CARTON T8100UA	1EM420786
S1	B	CARTON T8107UH	1EM421014
S2		STYROFOAM TOP ASSEMBLY T8100UA	1EM420783
S3		STYROFOAM BOTTOM ASSEMBLY T8100UA	1EM420784
S4	A	SERIAL NO. LABEL T8100UA	---------
S4	B	SERIAL NO. LABEL T8107UH	---------
S6		SET SHEET B5506UG 800X1500	0EM402369
ACCESSORIES			
X1		BAG POLYETHYLENE 235X365XT0.03	0EM408420
X2⚠	A	OWNERS MANUAL T8100UA	1EMN20238
X2⚠	B	OWNERS MANUAL T8107UH	1EMN20332
X3		REMOTE CONTROL 182/ERC001/ NE207UD	NE207UD
X4		DRY BATTERY R6P(AR)2PX	XB0M451HU002
Note: 1. V501 (CRT) HAS COUPLE OF SUBSTITUTIONAL PARTS AND EACH PARTS ALSO HAS MATCHING COMBINATION WITH L551. PLEASE SEE TABLE 1 FOR DETAILS OF MATCHING COMBINATION. 2. L551 (DEFLECTION YOKE) HAS MATCHING COMBINATION WITH V501. PLEASE SEE TABLE 1 FOR DETAILS OF MATCHING COMBINATION.			
CRT TYPE A			
L551⚠		DEFLECTION YOKE LLBY00ZSY005	LLBY00ZSY005
V501⚠		CRT A34AGT13X	TCRT190CP036
V501-1		C.P.MAGNET JH225-FN-00	XM04000BV003
V501-2		WEDGE FT-00110W	XV10000T4001
V501-3		RUBBER MAGNET 20X10X1.2	XM05000BV001
CRT TYPE B			
L551⚠		DEFLECTION YOKE LLBY00ZSY002	LLBY00ZSY002
V501⚠		CRT A34KQW42X	TCRT190MS010
V501-1		C.P.MAGNET JH225-FN-00	XM04000BV003
V501-2		WEDGE FT-00110W	XV10000T4001
V501-3		RUBBER MAGNET 20X10X1.2	XM05000BV001
CRT TYPE C			
L551⚠		DEFLECTION YOKE KDY3GCE83X	LLBY00ZMS027
V501⚠		CRT A34KQW42X	TCRT190SM013
V501-1		C.P.MAGNET JH225-014	XM04000BV009
V501-2		WEDGE FT-00110W	XV10000T4001
V501-3		RUBBER MAGNET 20X10X1.2	XM05000BV001
CRT TYPE D			
L551⚠		DEFLECTION YOKE CDY-M1422F	LLBY00ZQS001
V501⚠		CRT A34JLL90X(W)	TCRT190QS015
V501-1		C.P.MAGNET JH225-FN-00	XM04000BV003
V501-2		WEDGE FT-00110W	XV10000T4001
V501-3		RUBBER MAGNET 20X10X1.2	XM05000BV001
CRT TYPE E			
L551⚠		DEFLECTION YOKE CDY-M1455F	LLBY00ZQS007
V501⚠		CRT A34LRQ90X(VW)	TCRT190P7003
V501-1		C.P.MAGNET JH225-FN-00	XM04000BV003
V501-2		WEDGE FT-00110W	XV10000T4001
V501-3		RUBBER MAGNET 20X10X1.2	XM05000BV001
CRT TYPE F			
L551⚠		DEFLECTION YOKE LLBY00ZSY002	LLBY00ZSY002
V501⚠		CRT A34KPU02XX	TCRT190GS016
V501-1		C.P.MAGNET JH225-FN-00	XM04000BV003
V501-2		WEDGE FT-00110W	XV10000T4001
V501-3		RUBBER MAGNET 20X10X1.2	XM05000BV001
CRT TYPE G			
L551⚠		DEFLECTION YOKE LLBY00ZSY002	LLBY00ZSY002
V501⚠		CRT A34JXV70X	TCRT190THA02
V501-1		C.P.MAGNET JH225-FN-00	XM04000BV003
V501-2		WEDGE FT-00110W	XV10000T4001
V501-3		RUBBER MAGNET 20X10X1.2	XM05000BV001

Table 1 (V501 and L551 Combination)

Note 1: Purity and Convergence Adjustments must be performed following CRT replacement. Refer to Electrical Adjustment Instructions.

Note 2: Please confirm CRT Type No. on the CRT Warning Label which is located on the CRT. Then See the Table 1 for V501 and L551 combination chart. Please refer this CRT, Deflection Yoke combination chart for parts order.

V501: CRT Type No.	V501: CRT Part No.	L551: Deflection Yoke Part No.
A34AGT13X	TCRT190CP036	LLBY00ZSY005
A34KQW42X	TCRT190MS010	LLBY00ZSY002
A34KQW42X	TCRT190SM013	LLBY00ZMS027
A34JLL90X(W)	TCRT190QS015	LLBY00ZQS001
A34LRQ90X(VW)	TCRT190P7003	LLBY00ZQS007
A34KPU02XX	TCRT190GS016	LLBY00ZSY002
A34JXV70X	TCRT190THA02	LLBY00ZSY002

CRT Warning Label Location

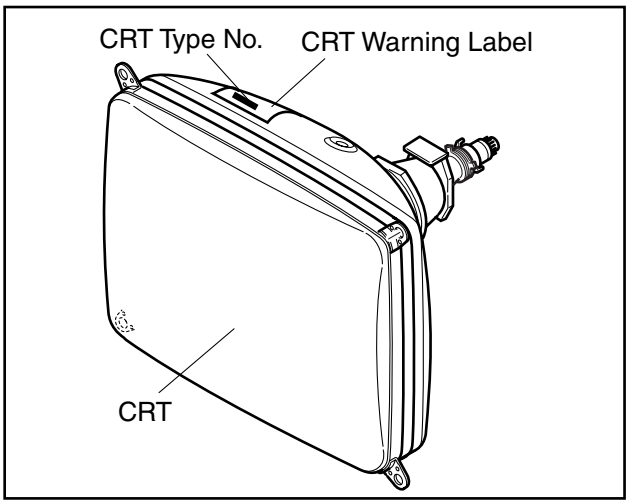

ELECTRICAL PARTS LIST

PRODUCT SAFETY NOTE: Products marked with a ⚠ have special characteristics important to safety. Before replacing any of these components, read carefully the product safety notice in this service manual. Don't degrade the safety of the product through improper servicing.

NOTES:

1. Parts that are not assigned part numbers (---------) are not available.
2. Tolerance of Capacitors and Resistors are noted with the following symbols.

C.....±0.25%	D.....±0.5%	F.....±1%
G.....±2%	J.....±5%	K.....±10%
M.....±20%	N.....±30%	Z.....+80/-20%

DVD MAIN CBA UNIT

Ref. No.	Description	Part No.
	DVD MAIN CBA UNIT	N79T1JUP

MMA CBA

Ref. No.	Description	Part No.
	MMA CBA Consists of the following	1ESA10559
	MAIN CBA CRT CBA	--------- ---------

MAIN CBA

Ref. No.	Description	Part No.
	MAIN CBA Consists of the following:	---------
	CAPACITORS	
C1001	CHIP CERAMIC CAP. CH J 180pF/50V	CHD1JJ3CH181
C1002	ELECTROLYTIC CAP. 330μF/6.3V M	CE0KMASDL331
C1003	CHIP CERAMIC CAP.(1608) B K 0.01μF/50V	CHD1JK30B103
C1004	CHIP CERAMIC CAP.(1608) B K 0.01μF/50V	CHD1JK30B103
C1005	CHIP CERAMIC CAP. CH J 180pF/50V	CHD1JJ3CH181
C1006	ELECTROLYTIC CAP. 10μF/50V M	CE1JMASDL100
C1008	ELECTROLYTIC CAP. 100μF/10V M	CE1AMASDL101
C1009	CERAMIC CAP.(AX) F Z 0.022μF/25V	CCA1EZTFZ223
C1036	CHIP CERAMIC CAP.(1608) B K 1000pF/50V	CHD1JK30B102
C1037	CHIP CERAMIC CAP. F Z 1μF/10V	CHD1AZ30F105
C1039	CHIP CERAMIC CAP. F Z 1μF/10V	CHD1AZ30F105
C1042	CHIP CERAMIC CAP. F Z 1μF/10V	CHD1AZ30F105
C1044	CERAMIC CAP.(AX) Y M 0.01μF/16V	CCA1CMT0Y103
C1047	CHIP CERAMIC CAP.(1608) B K 0.01μF/50V	CHD1JK30B103
C1048	ELECTROLYTIC CAP. 10μF/50V M	CE1JMASDL100
C1052	CHIP CERAMIC CAP.(1608) B K 0.047μF/50V	CHD1JK30B473
C1053A	FILM CAP.(P) 0.018μF/50V J	CMA1JJS00183
C1203	CHIP CERAMIC CAP.(1608) B K 0.01μF/50V	CHD1JK30B103
C1204	CHIP CERAMIC CAP.(1608) B K 0.015μF/50V	CHD1JK30B153
C1205	CHIP CERAMIC CAP.(1608) B K 1000pF/50V	CHD1JK30B102
C1206	CHIP CERAMIC CAP. B K 220pF/50V	CHD1JK30B221
C1207	FILM CAP.(P) 0.001μF/50V J	CMA1JJS00102
C1209	CHIP CERAMIC CAP.(1608) F Z 0.1μF/25V	CHD1EZ30F104
C1222	ELECTROLYTIC CAP. 0.1μF/50V M	CE1JMASDL0R1
C1223	ELECTROLYTIC CAP. 10μF/50V M	CE1JMASDL100
C1224	ELECTROLYTIC CAP. 1μF/50V M	CE1JMASDL1R0
C1225	ELECTROLYTIC CAP. 47μF/25V M	CE1EMASDL470
C1231	ELECTROLYTIC CAP. 100μF/10V M	CE1AMASDL101
C1232	ELECTROLYTIC CAP. 4.7μF/50V M	CE1JMASDL4R7
C1234	CHIP CERAMIC CAP. B K 560pF/50V	CHD1JK30B561
C1302	CHIP CERAMIC CAP.(1608) B K 0.01μF/50V	CHD1JK30B103
C1304	ELECTROLYTIC CAP. 100μF/10V M	CE1AMASDL101
C1305	CHIP CERAMIC CAP.(1608) B K 0.01μF/50V	CHD1JK30B103
C1306	CHIP CERAMIC CAP. F Z 1μF/10V	CHD1AZ30F105
C1307	CHIP CERAMIC CAP. F Z 1μF/10V	CHD1AZ30F105
C1308	ELECTROLYTIC CAP. 47μF/25V M	CE1EMASDL470
C1309	CHIP CERAMIC CAP.(1608) F Z 0.1μF/25V	CHD1EZ30F104
C1310	CHIP CERAMIC CAP. F Z 1μF/10V	CHD1AZ30F105
C1311	ELECTROLYTIC CAP. 100μF/16V M	CE1CMASDL101
C1313	ELECTROLYTIC CAP. 100μF/16V M	CE1CMASDL101
C1314	CHIP CERAMIC CAP.(1608) CH D 10pF/50V	CHD1JD3CH100
C1316	CHIP CERAMIC CAP. F Z 1μF/10V	CHD1AZ30F105
C1317	STACKED FILM CAP. 0.47μF/50V J	CMA1JJS00474
C1318	CHIP CERAMIC CAP.(1608) B K 0.01μF/50V	CHD1JK30B103
C1319	ELECTROLYTIC CAP. 2.2μF/50V M	CE1JMASDL2R2
C1320	CHIP CERAMIC CAP.(1608) B K 0.01μF/50V	CHD1JK30B103
C1324	ELECTROLYTIC CAP. 470μF/10V M	CE1AMASDL471
C1325	CHIP CERAMIC CAP. F Z 1μF/10V	CHD1AZ30F105
C1335	ELECTROLYTIC CAP. 100μF/16V M	CE1CMASDL101
C1348	ELECTROLYTIC CAP. 100μF/10V M	CE1AMASDL101
C1352	CHIP CERAMIC CAP.(1608) B K 0.01μF/50V	CHD1JK30B103
C1552	MYLAR CAP. 0.22μF/50V J	CMA1JJS00224
C1553	ELECTROLYTIC CAP. 2.2μF/50V M LL	CE1JMASLL2R2
C1555	ELECTROLYTIC CAP. 47μF/35V M	CE1GMASDL470
C1556	ELECTROLYTIC CAP. 1000μF/25V M	CE1EMZPDL102
C1559	ELECTROLYTIC CAP. 330μF/35V M	CE1GMASDL331
C1560	FILM CAP.(P) 0.01μF/50V J	CMA1JJS00103
C1571	P.P. CAP 0.33μF/200V J	CA2D334VC012
C1574	ELECTROLYTIC CAP. 4.7μF/250V M	CE2EMASDL4R7
C1577	FILM CAP.(P) 0.022μF/50V J	CMA1JJS00223
C1578	ELECTROLYTIC CAP. 47μF/35V M	CE1GMASDL470
C1580⚠	P.P. CAP 0.0082μF/1.6K J	CA3C822VC011
C1584	ELECTROLYTIC CAP. 1μF/160V M	CE2CMASDL1R0
C1591	ELECTROLYTIC CAP. 2.2μF/50V M	CE1JMASDL2R2
C1592	ELECTROLYTIC CAP. 47μF/25V M	CE1EMASDL470
C1593	ELECTROLYTIC CAP. 2.2μF/50V M	CE1JMASDL2R2
C1594	ELECTROLYTIC CAP. 47μF/160V M W/F	CE2CMZNDL470
C1601⚠	METALLIZED FILM CAP. 0.22μF/250V	CT2E224MS037
C1602⚠	METALLIZED FILM CAP. 0.1μF/250V	CT2E104MS037
C1605	CERAMIC CAP. BN 560pF/2KV	CCD3DKA0B561
C1607	SAFETY CAP. 4700pF/250V KX	CA2E472MR050
C1609	FILM CAP.(P) 0.068μF/50V J	CMA1JJS00683
C1610⚠	ELECTROLYTIC CAPACITOR 270μF/200V N	CA2D271DYG05
C1611	FILM CAP.(P) 0.0012μF/50V J	CMA1JJS00122
C1612	FILM CAP.(P) 0.068μF/50V J	CMA1JJS00683
C1613	ELECTROLYTIC CAP. 47μF/25V M	CE1EMASDL470
C1615	CERAMIC CAP. BN 680pF/2KV	CCD3DKA0B681
C1616⚠	ELECTROLYTIC CAP. 100μF/160V M	CE2CMZPDL101
C1617⚠	ELECTROLYTIC CAP. 470μF/35V M	CE1GMZPDL471
C1619	ELECTROLYTIC CAP. 470μF/16V M	CE1CMASDL471
C1621	CERAMIC CAP. B K 1000pF/100V	CCD2AKS0B102
C1623	FILM CAP.(P) 0.01μF/50V J	CMA1JJS00103
C1625	ELECTROLYTIC CAP. 1000μF/10V M	CE1AMASDL102

Ref. No.	Description	Part No.
C1626	ELECTROLYTIC CAP. 10μF/50V M	CE1JMASDL100
C1630	FILM CAP.(P) 0.0056μF/50V J	CMA1JJS00562
C1634	ELECTROLYTIC CAP. 1000μF/6.3V M	CE0KMASDL102
C1637	ELECTROLYTIC CAP. 100μF/10V M	CE1AMASDL101
C1639	ELECTROLYTIC CAP. 47μF/25V M	CE1EMASDL470
C1640	ELECTROLYTIC CAP. 1000μF/16V M	CE1CMZPDL102
C1650	ELECTROLYTIC CAP. 0.47μF/50V M	CE1JMASDLR47
C1654	CERAMIC CAP.(AX) B 0.01μF/50V	CCK1JKT0B103
C1662	ELECTROLYTIC CAP. 470μF/16V M	CE1CMZPDL471
C1664	ELECTROLYTIC CAP. 220μF/6.3V M	CE0KMASDL221
C1669	CHIP CERAMIC CAP.(1608) B K 0.01μF/50V	CHD1JK30B103
C1670	ELECTROLYTIC CAP. 1000μF/6.3V M	CE0KMASDL102
C1702	CHIP CERAMIC CAP. F Z 1μF/10V	CHD1AZ30F105
C1704	CHIP CERAMIC CAP. F Z 1μF/10V	CHD1AZ30F105
C1705	CHIP CERAMIC CAP.(1608) B K 1000pF/50V	CHD1JK30B102
C1706	CHIP CERAMIC CAP.(1608) B K 1000pF/50V	CHD1JK30B102
C1731	CHIP CERAMIC CAP.(1608) CH J 100pF/50V	CHD1JJ3CH101
C1734	ELECTROLYTIC CAP. 47μF/25V M	CE1EMASDL470
C1735	ELECTROLYTIC CAP. 47μF/25V M	CE1EMASDL470
C1736	CHIP CERAMIC CAP.(1608) F Z 0.1μF/25V	CHD1EZ30F104
C1746	ELECTROLYTIC CAP. 100μF/10V M	CE1AMASDL101
C1748	PCB JUMPER D0.6-P5.0	JW5.0T
C1749	PCB JUMPER D0.6-P5.0	JW5.0T
C1803	ELECTROLYTIC CAP. 220μF/16V M	CE1CMASDL221
C1804	ELECTROLYTIC CAP. 220μF/16V M	CE1CMASDL221
C1805	ELECTROLYTIC CAP. 470μF/16V M	CE1CMASDL471
C1808	CHIP CERAMIC CAP. F Z 1μF/10V	CHD1AZ30F105
C1809	CHIP CERAMIC CAP.(1608) B K 0.01μF/50V	CHD1JK30B103
C1810	CHIP CERAMIC CAP. F Z 1μF/10V	CHD1AZ30F105
C1811	CHIP CERAMIC CAP.(1608) B K 0.01μF/50V	CHD1JK30B103
C1812	ELECTROLYTIC CAP. 100μF/16V M	CE1CMASDL101
C1814	ELECTROLYTIC CAP. 10μF/25V M H7	CE1EMASSL100
C1815	ELECTROLYTIC CAP. 10μF/25V M H7	CE1EMASSL100
C1816	CHIP CERAMIC CAP.(1608) B K 5600pF/50V	CHD1JK30B562
C1817	CHIP CERAMIC CAP.(1608) B K 5600pF/50V	CHD1JK30B562
C1820	CHIP CERAMIC CAP.(1608) B K 1000pF/50V	CHD1JK30B102
C1851	ELECTROLYTIC CAP. 4.7μF/50V M H7	CE1JMASSL4R7
C1852	ELECTROLYTIC CAP. 1μF/50V M H7	CE1JMASSL010
C9280	CHIP CERAMIC CAP.(1608) B K 0.1μF/25V	CHD1EK30B104
C9281	CHIP CERAMIC CAP.(1608) F Z 0.1μF/25V	CHD1EZ30F104
C9284	CHIP CERAMIC CAP.(1608) B K 6800pF/50V	CHD1JK30B682
C9288	CHIP CERAMIC CAP.(1608) B K 3300pF/50V	CHD1JK30B332
C9289	CHIP CERAMIC CAP.(1608) B K 3300pF/50V	CHD1JK30B332
C9311	CHIP CERAMIC CAP.(1608) F Z 0.1μF/25V	CHD1EZ30F104
C9313	CHIP CERAMIC CAP. CH J 220pF/50V	CHD1JJ3CH221
C9314	CHIP CERAMIC CAP.(1608) B K 3300pF/50V	CHD1JK30B332
C9315	CHIP CERAMIC CAP.(1608) F Z 0.1μF/25V	CHD1EZ30F104
C9316	CHIP CERAMIC CAP.(1608) F Z 0.1μF/25V	CHD1EZ30F104
C9317	CHIP CERAMIC CAP.(1608) F Z 0.1μF/25V	CHD1EZ30F104
C9318	CHIP CERAMIC CAP.(1608) F Z 0.1μF/25V	CHD1EZ30F104
C9324	CHIP CERAMIC CAP.(1608) F Z 0.1μF/25V	CHD1EZ30F104
C9325	CHIP CERAMIC CAP.(1608) F Z 0.1μF/25V	CHD1EZ30F104
C9326	CHIP CERAMIC CAP.(1608) F Z 0.1μF/25V	CHD1EZ30F104
C9327	CHIP CERAMIC CAP.(1608) F Z 0.1μF/25V	CHD1EZ30F104
CONNECTORS		
CN1571⚠	CONNECTOR BASE 5P TV-50P-05-V3	J3TVC05TG002
CN1601⚠	CONNECTOR BASE 2P TV-50P-02-V3	J3TVC02TG002
CN1801	STRAIGHT CONNECTOR BASE 00 8283 0212 00 000	J383C02UG002
CN1802	STRAIGHT CONNECTOR BASE 00 8283 0212 00 000	J383C02UG002
CN9301	FMN CONNECTOR TOP 6P 06FMN-BTRK	JCFNG06JG002

Ref. No.	Description	Part No.
DIODES		
D1001	PCB JUMPER D0.6-P5.0	JW5.0T
D1201	ZENER DIODE MTZJT-775.6B	QDTB0MTZJ5R6
D1206	ZENER DIODE MTZJT-776.2B	QDTB0MTZJ6R2
D1302	ZENER DIODE MTZJT-7710A	QDTA00MTZJ10
D1303	PCB JUMPER D0.6-P5.0	JW5.0T
D1307	SWITCHING DIODE 1SS133(T-77)	QDTZ001SS133
D1309⚠	SWITCHING DIODE 1SS133(T-77)	QDTZ001SS133
D1311	SWITCHING DIODE 1SS133(T-77)	QDTZ001SS133
D1312	SWITCHING DIODE 1SS133(T-77)	QDTZ001SS133
D1313	SWITCHING DIODE 1SS133(T-77)	QDTZ001SS133
D1318	SWITCHING DIODE 1SS133(T-77)	QDTZ001SS133
D1321	SWITCHING DIODE 1SS133(T-77)	QDTZ001SS133
D1552	DIODE 1N5397-B	NDLZ001N5397
D1571	RECTIFIER DIODE FR202-B/P	NDQZ000FR202
D1572⚠	DIODE FR104-B	NDLZ000FR104
D1584	SWITCHING DIODE 1SS133(T-77)	QDTZ001SS133
D1585	ZENER DIODE MTZJT-775.1B	QDTB0MTZJ5R1
D1591⚠	ZENER DIODE MTZJT-7736B	QDTB00MTZJ36
D1595⚠	ZENER DIODE MTZJT-7720C	QDTC00MTZJ20
D1596⚠	SWITCHING DIODE 1SS133(T-77)	QDTZ001SS133
D1597⚠	SWITCHING DIODE 1SS133(T-77)	QDTZ001SS133
D1598⚠	DIODE FR104-B	NDLZ000FR104
D1601	PCB JUMPER D0.6-P10.0	JW10.0T
D1603⚠	DIODE 1N5399-B/P	NDLZ001N5399
D1604⚠	DIODE 1N5399-B/P	NDLZ001N5399
D1605⚠	DIODE 1N5399-B/P	NDLZ001N5399
D1606⚠	DIODE 1N5399-B/P	NDLZ001N5399
D1607⚠	ZENER DIODE MTZJT-7720C	QDTC00MTZJ20
D1608	SWITCHING DIODE 1SS133(T-77)	QDTZ001SS133
D1609⚠	SWITCHING DIODE 1SS133(T-77)	QDTZ001SS133
D1610	ZENER DIODE MTZJT-775.6B	QDTB0MTZJ5R6
D1613	SWITCHING DIODE 1SS133(T-77)	QDTZ001SS133
D1614⚠	ZENER DIODE MTZJT-7736A	QDTA00MTZJ36
D1616	SWITCHING DIODE 1SS133(T-77)	QDTZ001SS133
D1617⚠	DIODE FR154	NDLZ000FR154
D1618	DIODE 15KRA40	QDLZ015KRA40
D1619⚠	DIODE FR104-B	NDLZ000FR104
D1620⚠	ZENER DIODE MTZJT-777.5B	QDTB0MTZJ7R5
D1621	SWITCHING DIODE 1SS133(T-77)	QDTZ001SS133
D1623⚠	DIODE FR154	NDLZ000FR154
D1624	ZENER DIODE MTZJT-7715B	QDTB00MTZJ15
D1625⚠	RECTIFIER DIODE FR202-B/P	NDQZ000FR202
D1626	ZENER DIODE MTZJT-7736A	QDTA00MTZJ36
D1627⚠	SCHOTTKY BARRIER DIODE 21DQ04	QDQZ0021DQ04
D1629	SWITCHING DIODE 1SS133(T-77)	QDTZ001SS133
D1633	ZENER DIODE MTZJT-7716B	QDTB00MTZJ16
D1637⚠	SWITCHING DIODE 1SS133(T-77)	QDTZ001SS133
D1639	PCB JUMPER D0.6-P10.0	JW10.0T
D1640⚠	DIODE 1ZC36	QDQZ0001ZC36
D1641	ZENER DIODE MTZJT-775.6C	QDTC0MTZJ5R6
D1650⚠	SWITCHING DIODE 1SS133(T-77)	QDTZ001SS133
D1652⚠	SWITCHING DIODE 1SS133(T-77)	QDTZ001SS133
D1653⚠	SWITCHING DIODE 1SS133(T-77)	QDTZ001SS133
D1659	SWITCHING DIODE 1SS133(T-77)	QDTZ001SS133
D1662	RECTIFIER DIODE ERA15-02	AERA1502****
D1731	SWITCHING DIODE 1SS133(T-77)	QDTZ001SS133
D1732	SWITCHING DIODE 1SS133(T-77)	QDTZ001SS133
D1801⚠	SWITCHING DIODE 1SS133(T-77)	QDTZ001SS133
ICS		
IC1001	IC VIF/SIF M61113FP	QSZBA0SHT019
IC1201⚠	MICRO COMPUTER+VCD M61273M8-067FP	QSZAA0RHT073

Ref. No.	Description	Part No.
IC1202	IC MEMORY BR24C02F-W	QSMBA0SRM003
IC1551⚠	VERTICAL OUTPUT IC LA78040A	QSBBA0SSY003
IC1601⚠	PHOTOCOUPLER LTV-817C-F	NPEC0LTV817F
IC1602	VOLTAGE REGULATOR PQ070XF01SZH	QSZBA0SSH054
IC1603	IC SHUNT REGULATOR KIA431-AT	NSZLA0TJY001
IC1604	IC SHUNT REGULATOR KIA431-AT	NSZLA0TJY001
IC1801	IC AN17812A	QSZBA0SMS017
IC9202	IC(OPAMP) LM324NSR	NSZBA0TTY190
IC9301	ACTUATER DRIVER SA5694	NSZBA0T0S002
COILS		
L1031	PCB JUMPER D0.6-P5.0	JW5.0T
L1033	INDUCTOR 18μH-J-26T	LLAXJATTU180
L1041	PCB JUMPER D0.6-P5.0	JW5.0T
L1204	PCB JUMPER D0.6-P5.0	JW5.0T
L1301	INDUCTOR 22μH-K-5FT	LLARKBSTU220
L1302	PCB JUMPER D0.6-P5.0	JW5.0T
L1557	CHOKE COIL 22μH-K	LLBD00PKV006
L1559	PCB JUMPER D0.6-P7.5	JW7.5T
L1601⚠	LINE FILTER ELF15N813AN	LLBG00ZMS050
L1615	INDUCTOR 10μH-K-5FT	LLARKBSTU100
TRANSISTORS		
Q1285	RES. BUILT-IN TRANSISTOR KRA103M	NQSZ0KRA103M
Q1301	TRANSISTOR 2SC2785(F)	QQSF02SC2785
Q1303	TRANSISTOR 2SC2120-O-TPE2	QQS002SC2120
Q1304	TRANSISTOR 2SC2785(F)	QQSF02SC2785
Q1571⚠	TRANSISTOR TT2138LS-YB11	QQZZ00TT2138
Q1572	TRANSISTOR 2SC1627Y-TPE2	QQSY02SC1627
Q1591⚠	TRANSISTOR 2SC2785(F)	QQSF02SC2785
Q1601⚠	MOS FET 2SK3563	QFWZ02SK3563
Q1602⚠	TRANSISTOR 2SC2120-O-TPE2	QQS002SC2120
Q1604⚠	TRANSISTOR 2SC2785(F)	QQSF02SC2785
Q1605	TRANSISTOR 2SC2785(F)	QQSF02SC2785
Q1606⚠	TRANSISTOR 2SA950(O)	Q2SA9500TPE2
Q1607	TRANSISTOR 2SC2785(F)	QQSF02SC2785
Q1608	TRANSISTOR KTC3199(GR)	NQS10KTC3199
Q1609	RES. BUILT-IN TRANSISTOR KRC103M	NQSZ0KRC103M
Q1610	TRANSISTOR 2SA1175(F)	QQSF02SA1175
Q1612	TRANSISTOR 2SC2785(F)	QQSF02SC2785
Q1613	TRANSISTOR 2SC2120-O-TPE2	QQS002SC2120
Q1614	TRANSISTOR KTC3199(GR)	NQS10KTC3199
Q1615	TRANSISTOR 2SD400(F)	QQUF002SD400
Q1616	TRANSISTOR 2SC2120-O-TPE2	QQS002SC2120
Q1619	TRANSISTOR KTC3199(GR)	NQS10KTC3199
Q1621	TRANSISTOR 2SC2785(F)	QQSF02SC2785
Q1622	TRANSISTOR 2SC2785(F)	QQSF02SC2785
Q1623	TRANSISTOR 2SC2785(F)	QQSF02SC2785
Q1731	TRANSISTOR 2SC2785(F)	QQSF02SC2785
Q1732	TRANSISTOR 2SC2785(F)	QQSF02SC2785
RESISTORS		
R1001	CHIP RES.(1608) 1/10W J 100 Ω	RRXAJR5Z0101
R1002	CHIP RES.(1608) 1/10W J 100 Ω	RRXAJR5Z0101
R1010	CHIP RES.(1608) 1/10W J 200 Ω	RRXAJR5Z0201
R1011	CHIP RES.(1608) 1/10W J 47 Ω	RRXAJR5Z0470
R1012	CHIP RES.(1608) 1/10W J 150 Ω	RRXAJR5Z0151
R1013	CARBON RES. 1/4W J 1k Ω	RCX4JATZ0102
R1016	CARBON RES. 1/4W J 330 Ω	RCX4JATZ0331
R1018	CHIP RES.(1608) 1/10W J 220k Ω	RRXAJR5Z0224
R1019	CHIP RES.(1608) 1/10W J 220k Ω	RRXAJR5Z0224
R1022	CHIP RES.(1608) 1/10W J 2.2k Ω	RRXAJR5Z0222
R1030	CARBON RES. 1/4W J 12k Ω	RCX4JATZ0123
R1031	CHIP RES.(1608) 1/10W J 27k Ω	RRXAJR5Z0273
R1037	CHIP RES.(1608) 1/10W J 180 Ω	RRXAJR5Z0181

Ref. No.	Description	Part No.
R1041	CHIP RES.(1608) 1/10W J 56k Ω	RRXAJR5Z0563
R1201	CHIP RES.(1608) 1/10W J 1.5k Ω	RRXAJR5Z0152
R1202	CHIP RES.(1608) 1/10W J 1.5k Ω	RRXAJR5Z0152
R1203	CHIP RES.(1608) 1/10W J 2.2k Ω	RRXAJR5Z0222
R1204	CHIP RES.(1608) 1/10W J 2.7k Ω	RRXAJR5Z0272
R1205	CHIP RES.(1608) 1/10W J 10k Ω	RRXAJR5Z0103
R1206	CHIP RES.(1608) 1/10W J 1.5k Ω	RRXAJR5Z0152
R1207	CHIP RES.(1608) 1/10W J 1.5k Ω	RRXAJR5Z0152
R1208	CHIP RES.(1608) 1/10W J 2.2k Ω	RRXAJR5Z0222
R1209	CHIP RES.(1608) 1/10W J 2.7k Ω	RRXAJR5Z0272
R1210	CHIP RES.(1608) 1/10W J 4.7k Ω	RRXAJR5Z0472
R1211	CHIP RES.(1608) 1/10W J 10k Ω	RRXAJR5Z0103
R1216	CHIP RES.(1608) 1/10W J 1k Ω	RRXAJR5Z0102
R1220	CHIP RES.(1608) 1/10W J 100k Ω	RRXAJR5Z0104
R1221	CHIP RES.(1608) 1/10W J 100k Ω	RRXAJR5Z0104
R1222	CHIP RES.(1608) 1/10W J 1k Ω	RRXAJR5Z0102
R1223	CHIP RES.(1608) 1/10W J 100k Ω	RRXAJR5Z0104
R1224	CARBON RES. 1/4W J 5.6k Ω	RCX4JATZ0562
R1225	CARBON RES. 1/4W J 100 Ω	RCX4JATZ0101
R1229	CHIP RES.(1608) 1/10W J 4.7k Ω	RRXAJR5Z0472
R1230	CARBON RES. 1/4W J 5.6k Ω	RCX4JATZ0562
R1231	CHIP RES.(1608) 1/10W J 22k Ω	RRXAJR5Z0223
R1232	CHIP RES.(1608) 1/10W J 2.7k Ω	RRXAJR5Z0272
R1233	CHIP RES.(1608) 1/10W J 100 Ω	RRXAJR5Z0101
R1234	CHIP RES.(1608) 1/10W J 100 Ω	RRXAJR5Z0101
R1235	CHIP RES.(1608) 1/10W J 6.8k Ω	RRXAJR5Z0682
R1236	CHIP RES.(1608) 1/10W J 22k Ω	RRXAJR5Z0223
R1237	CHIP RES.(1608) 1/10W J 10k Ω	RRXAJR5Z0103
R1238	CARBON RES. 1/4W J 22k Ω	RCX4JATZ0223
R1240	CHIP RES.(1608) 1/10W J 1M Ω	RRXAJR5Z0105
R1241	CHIP RES.(1608) 1/10W J 470 Ω	RRXAJR5Z0471
R1293	CARBON RES. 1/4W J 47k Ω	RCX4JATZ0473
R1294	CHIP RES.(1608) 1/10W J 1k Ω	RRXAJR5Z0102
R1301	CHIP RES.(1608) 1/10W J 180k Ω	RRXAJR5Z0184
R1302	CHIP RES.(1608) 1/10W J 15k Ω	RRXAJR5Z0153
R1303	CHIP RES.(1608) 1/10W J 10k Ω	RRXAJR5Z0103
R1304	CHIP RES.(1608) 1/10W J 470 Ω	RRXAJR5Z0471
R1305	CARBON RES. 1/4W J 10k Ω	RCX4JATZ0103
R1306	CHIP RES.(1608) 1/10W J 5.6k Ω	RRXAJR5Z0562
R1308	CHIP RES.(1608) 1/10W J 1k Ω	RRXAJR5Z0102
R1309	CHIP RES.(1608) 1/10W J 39k Ω	RRXAJR5Z0393
R1312	CHIP RES.(1608) 1/10W J 100 Ω	RRXAJR5Z0101
R1317	CHIP RES.(1608) 1/10W J 100 Ω	RRXAJR5Z0101
R1320	CHIP RES.(1608) 1/10W J 120k Ω	RRXAJR5Z0124
R1321	CARBON RES. 1/4W J 56 Ω	RCX4JATZ0560
R1322	CARBON RES. 1/4W J 10 Ω	RCX4JATZ0100
R1323	CHIP RES.(1608) 1/10W J 6.8k Ω	RRXAJR5Z0682
R1327	CARBON RES. 1/4W J 22 Ω	RCX4JATZ0220
R1328	CARBON RES. 1/4W J 680 Ω	RCX4JATZ0681
R1330	CARBON RES. 1/4W J 680 Ω	RCX4JATZ0681
R1334	CHIP RES.(1608) 1/10W J 330 Ω	RRXAJR5Z0331
R1335	CHIP RES.(1608) 1/10W J 330 Ω	RRXAJR5Z0331
R1336	CHIP RES.(1608) 1/10W J 330 Ω	RRXAJR5Z0331
R1338	CARBON RES. 1/4W J 12 Ω	RCX4JATZ0120
R1339	CARBON RES. 1/4W J 1.2 Ω	RCX4JATZ01R2
R1346	CARBON RES. 1/4W J 12k Ω	RCX4JATZ0123
R1347	PCB JUMPER D0.6-P5.0	JW5.0T
R1430	CHIP RES.(1608) 1/10W J 3.9k Ω	RRXAJR5Z0392
R1544⚠	CHIP RES.(1608) 1/10W J 10k Ω	RRXAJR5Z0103
R1551	CHIP RES.(1608) 1/10W J 330 Ω	RRXAJR5Z0331
R1552	CARBON RES. 1/4W J 1.5k Ω	RCX4JATZ0152
R1556	CARBON RES. 1/4W J 1 Ω	RCX4JATZ01R0
R1557	CARBON RES. 1/4W J 470 Ω	RCX4JATZ0471

Ref. No.	Description	Part No.
R1558	CARBON RES. 1/4W J 22k Ω	RCX4JATZ0223
R1559	CARBON RES. 1/4W J 1k Ω	RCX4JATZ0102
R1560	CARBON RES. 1/4W J 4.7k Ω	RCX4JATZ0472
R1561	CARBON RES. 1/4W J 8.2k Ω	RCX4JATZ0822
R1562	CARBON RES. 1/4W J 6.8 Ω	RCX4JATZ06R8
R1563	CARBON RES. 1/4W J 8.2 Ω	RCX4JATZ08R2
R1564	PCB JUMPER D0.6-P5.0	JW5.0T
R1565⚠	CARBON RES. 1/4W J 4.7 Ω	RCX4JATZ04R7
R1566⚠	CARBON RES. 1/4W J 4.7 Ω	RCX4JATZ04R7
R1567⚠	CARBON RES. 1/4W J 4.7 Ω	RCX4JATZ04R7
R1569⚠	CARBON RES. 1/2W J 68 Ω	RCX2JZQZ0680
R1570⚠	CARBON RES. 1/4W J 4.7 Ω	RCX4JATZ04R7
R1571	CARBON RES. 1/4W J 180 Ω	RCX4JATZ0181
R1573	CARBON RES. 1/4W J 470 Ω	RCX4JATZ0471
R1574	METAL OXIDE FILM RES. 2W J 1k Ω	RN02102ZU001
R1575	METAL OXIDE FILM RES. 2W J 1k Ω	RN02102ZU001
R1576	CHIP RES.(1608) 1/10W J 1k Ω	RRXAJR5Z0102
R1577	CARBON RES. 1/4W J 180 Ω	RCX4JATZ0181
R1578⚠	CARBON RES. 1/4W J 4.7 Ω	RCX4JATZ04R7
R1579⚠	CARBON RES. 1/4W J 33 Ω	RCX4JATZ0330
R1580⚠	CARBON RES. 1/4W J 27 Ω	RCX4JATZ0270
R1581⚠	CARBON RES. 1/4W J 27 Ω	RCX4JATZ0270
R1582	CARBON RES. 1/4W J 6.8 Ω	RCX4JATZ06R8
R1583⚠	METAL OXIDE FILM RES. 2W J 1.8 Ω	RN021R8ZU001
R1584	CARBON RES. 1/4W J 1k Ω	RCX4JATZ0102
R1586	CARBON RES. 1/4W J 1k Ω	RCX4JATZ0102
R1587	CARBON RES. 1/4W J 100k Ω	RCX4JATZ0104
R1588	CARBON RES. 1/4W J 100k Ω	RCX4JATZ0104
R1589	CARBON RES. 1/4W J 1k Ω	RCX4JATZ0102
R1590	CARBON RES. 1/4W J 1k Ω	RCX4JATZ0102
R1592	CARBON RES. 1/4W J 180k Ω	RCX4JATZ0184
R1593	CARBON RES. 1/4W J 56k Ω	RCX4JATZ0563
R1594⚠	CARBON RES. 1/4W J 56k Ω	RCX4JATZ0563
R1595	CARBON RES. 1/4W J 15k Ω	RCX4JATZ0153
R1596⚠	CARBON RES. 1/4W J 6.8k Ω	RCX4JATZ0682
R1597	CHIP RES.(1608) 1/10W J 470 Ω	RRXAJR5Z0471
R1598⚠	CHIP RES.(1608) 1/10W J 22k Ω	RRXAJR5Z0223
R1599⚠	CHIP RES.(1608) 1/10W J 10k Ω	RRXAJR5Z0103
R1601⚠	CEMENT RES. 3W K 1.2 Ω	RW031R2PG007
R1602	CARBON RES. 1/4W J 220 Ω	RCX4JATZ0221
R1603	CARBON RES. 1/4W J 220 Ω	RCX4JATZ0221
R1604⚠	CARBON RES. 1/4W J 680k Ω	RCX4JATZ0684
R1605⚠	CARBON RES. 1/4W J 680k Ω	RCX4JATZ0684
R1606⚠	CARBON RES. 1/4W J 680k Ω	RCX4JATZ0684
R1607	CARBON RES. 1/4W J 680k Ω	RCX4JATZ0684
R1608	CARBON RES. 1/4W J 180k Ω	RCX4JATZ0184
R1610	CARBON RES. 1/4W J 1.5k Ω	RCX4JATZ0152
R1611⚠	METAL OXIDE FILM RES. 2W J 0.39 Ω	RN02R39ZU001
R1612	METAL OXIDE FILM RES. 2W J 3.9 Ω	RN023R9ZU001
R1613	CARBON RES. 1/4W J 120 Ω	RCX4JATZ0121
R1614	CARBON RES. 1/4W J 2.2k Ω	RCX4JATZ0222
R1615	CARBON RES. 1/4W J 33k Ω	RCX4JATZ0333
R1617	CARBON RES. 1/4W J 180 Ω	RCX4JATZ0181
R1619	CARBON RES. 1/2W J 12 Ω	RCX2JZQZ0120
R1620	CARBON RES. 1/4W J 6.8 Ω	RCX4JATZ06R8
R1622	METAL OXIDE FILM RES. 2W J 8.2k Ω	RN02822ZU001
R1623	CARBON RES. 1/4W J 1.5k Ω	RCX4JATZ0152
R1624	CARBON RES. 1/4W J 43k Ω	RCX4JATZ0433
R1625	CARBON RES. 1/4W J 33k Ω	RCX4JATZ0333
R1629⚠	CARBON RES. 1/4W J 10k Ω	RCX4JATZ0103
R1630	CARBON RES. 1/4W J 10k Ω	RCX4JATZ0103
R1631	CARBON RES. 1/4W J 12k Ω	RCX4JATZ0123
R1632⚠	CARBON RES. 1/4W J 1k Ω	RCX4JATZ0102

Ref. No.	Description	Part No.
R1633⚠	CARBON RES. 1/4W J 5.6k Ω	RCX4JATZ0562
R1634	CHIP RES.(1608) 1/10W J 6.8k Ω	RRXAJR5Z0682
R1635	CHIP RES.(1608) 1/10W J 10k Ω	RRXAJR5Z0103
R1636	CARBON RES. 1/4W J 3.9 Ω	RCX4JATZ03R9
R1637	CARBON RES. 1/4W J 3.9 Ω	RCX4JATZ03R9
R1638⚠	CARBON RES. 1/4W J 3.3 Ω	RCX4JATZ03R3
R1639⚠	CARBON RES. 1/2W J 1.5k Ω	RCX2JZQZ0152
R1640⚠	CARBON RES. 1/4W J 56k Ω	RCX4JATZ0563
R1641	CHIP RES.(1608) 1/10W J 10k Ω	RRXAJR5Z0103
R1642	CHIP RES.(1608) 1/10W J 6.8k Ω	RRXAJR5Z0682
R1643	PCB JUMPER D0.6-P5.0	JW5.0T
R1644	CARBON RES. 1/4W J 47k Ω	RCX4JATZ0473
R1645	CHIP RES.(1608) 1/10W J 47k Ω	RRXAJR5Z0473
R1646	CARBON RES. 1/4W J 27 Ω	RCX4JATZ0270
R1647	CARBON RES. 1/4W J 8.2 Ω	RCX4JATZ08R2
R1648	CARBON RES. 1/4W J 6.8 Ω	RCX4JATZ06R8
R1649	CARBON RES. 1/4W J 22 Ω	RCX4JATZ0220
R1650	PCB JUMPER D0.6-P5.0	JW5.0T
R1651	CARBON RES. 1/4W J 47k Ω	RCX4JATZ0473
R1652	CHIP RES.(1608) 1/10W J 220 Ω	RRXAJR5Z0221
R1654	CARBON RES. 1/4W J 18 Ω	RCX4JATZ0180
R1655	CARBON RES. 1/4W J 3.9 Ω	RCX4JATZ03R9
R1656	CARBON RES. 1/4W J 22k Ω	RCX4JATZ0223
R1657	CHIP RES.(1608) 1/10W J 22k Ω	RRXAJR5Z0223
R1658	CARBON RES. 1/4W J 3.9 Ω	RCX4JATZ03R9
R1659	CARBON RES. 1/4W J 680 Ω	RCX4JATZ0681
R1660	CARBON RES. 1/4W J 680 Ω	RCX4JATZ0681
R1661	CHIP RES.(1608) 1/10W J 1k Ω	RRXAJR5Z0102
R1663	CHIP RES.(1608) 1/10W F 8.2k Ω	RRXAFR5Z8201
R1664	CHIP RES.(1608) 1/10W F 4.7k Ω	RRXAFR5Z4701
R1665	CARBON RES. 1/4W J 1 Ω	RCX4JATZ01R0
R1667	CHIP RES.(1608) 1/10W F 220 Ω	RRXAFR5Z2200
R1670	CARBON RES. 1/4W J 10k Ω	RCX4JATZ0103
R1671	CARBON RES. 1/4W J 180 Ω	RCX4JATZ0181
R1672	CARBON RES. 1/4W J 2.2k Ω	RCX4JATZ0222
R1673	CARBON RES. 1/4W J 560 Ω	RCX4JATZ0561
R1675	CARBON RES. 1/4W J 1 Ω	RCX4JATZ01R0
R1681	CHIP RES.(1608) 1/10W J 10k Ω	RRXAJR5Z0103
R1682	CHIP RES.(1608) 1/10W J 22k Ω	RRXAJR5Z0223
R1683	CHIP RES.(1608) 1/10W J 47k Ω	RRXAJR5Z0473
R1684	CHIP RES.(1608) 1/10W J 47k Ω	RRXAJR5Z0473
R1685	CHIP RES.(1608) 1/10W J 47k Ω	RRXAJR5Z0473
R1686	CARBON RES. 1/4W J 4.7 Ω	RCX4JATZ04R7
R1687	CARBON RES. 1/4W G 5.6k Ω	RCX4GATZ0562
R1688	CHIP RES.(1608) 1/10W F 15k Ω	RRXAFR5Z1502
R1689	CHIP RES.(1608) 1/10W F 18k Ω	RRXAFR5Z1802
R1690	CHIP RES.(1608) 1/10W F 56k Ω	RRXAFR5Z5602
R1694	CHIP RES.(1608) 1/10W J 10 Ω	RRXAJR5Z0100
R1695	CARBON RES. 1/4W J 390 Ω	RCX4JATZ0391
R1701	CHIP RES.(1608) 1/10W J 75 Ω	RRXAJR5Z0750
R1702	CHIP RES.(1608) 1/10W J 18k Ω	RRXAJR5Z0183
R1703	CHIP RES.(1608) 1/10W J 100k Ω	RRXAJR5Z0104
R1704	CHIP RES.(1608) 1/10W J 18k Ω	RRXAJR5Z0183
R1706	CHIP RES.(1608) 1/10W J 100k Ω	RRXAJR5Z0104
R1707	CHIP RES.(1608) 1/10W J 1.5k Ω	RRXAJR5Z0152
R1708	CHIP RES.(1608) 1/10W J 1.5k Ω	RRXAJR5Z0152
R1731	CHIP RES.(1608) 1/10W J 2k Ω	RRXAJR5Z0202
R1732	CHIP RES.(1608) 1/10W J 2.2k Ω	RRXAJR5Z0222
R1733	CHIP RES.(1608) 1/10W J 2.2k Ω	RRXAJR5Z0222
R1735	CARBON RES. 1/4W J 75 Ω	RCX4JATZ0750
R1737	CHIP RES.(1608) 1/10W J 220 Ω	RRXAJR5Z0221
R1738	CHIP RES.(1608) 1/10W J 1k Ω	RRXAJR5Z0102
R1739	CARBON RES. 1/4W J 47k Ω	RCX4JATZ0473

Ref. No.	Description	Part No.
R1752	CHIP RES.(1608) 1/10W J 100 Ω	RRXAJR5Z0101
R1753	CHIP RES.(1608) 1/10W J 100 Ω	RRXAJR5Z0101
R1788	CHIP RES.(1608) 1/10W J 160 Ω	RRXAJR5Z0161
R1789	CHIP RES.(1608) 1/10W J 160 Ω	RRXAJR5Z0161
R1790	CHIP RES.(1608) 1/10W J 100 Ω	RRXAJR5Z0101
R1791	CHIP RES.(1608) 1/10W J 100 Ω	RRXAJR5Z0101
R1801	CHIP RES.(1608) 1/10W J 2.7k Ω	RRXAJR5Z0272
R1802	CHIP RES.(1608) 1/10W J 4.7k Ω	RRXAJR5Z0472
R1803	CHIP RES.(1608) 1/10W J 2.7k Ω	RRXAJR5Z0272
R1804	CHIP RES.(1608) 1/10W J 4.7k Ω	RRXAJR5Z0472
R1805	PCB JUMPER D0.6-P5.0	JW5.0T
R1806	PCB JUMPER D0.6-P5.0	JW5.0T
R1807	CARBON RES. 1/4W J 4.7k Ω	RCX4JATZ0472
R1808	CARBON RES. 1/4W J 2.2k Ω	RCX4JATZ0222
R1809⚠	METAL OXIDE FILM RES. 1W J 15 Ω	RN01150ZU001
R1810	CHIP RES.(1608) 1/10W J 4.7k Ω	RRXAJR5Z0472
R1811	CHIP RES.(1608) 1/10W J 4.7k Ω	RRXAJR5Z0472
R1812	CHIP RES.(1608) 1/10W J 1.8k Ω	RRXAJR5Z0182
R1813	CHIP RES.(1608) 1/10W J 1.8k Ω	RRXAJR5Z0182
R1818⚠	METAL OXIDE FILM RES. 1W J 15 Ω	RN01150ZU001
R1821	CARBON RES. 1/4W J 180 Ω	RCX4JATZ0181
R1822	CARBON RES. 1/4W J 180 Ω	RCX4JATZ0181
R1854	CHIP RES.(1608) 1/10W J 1.5k Ω	RRXAJR5Z0152
R1855	CHIP RES.(1608) 1/10W J 5.6k Ω	RRXAJR5Z0562
R9270	CHIP RES.(1608) 1/10W J 8.2k Ω	RRXAJR5Z0822
R9271	CHIP RES.(1608) 1/10W J 18k Ω	RRXAJR5Z0183
R9274	CHIP RES.(1608) 1/10W J 4.7k Ω	RRXAJR5Z0472
R9275	CHIP RES.(1608) 1/10W J 6.2k Ω	RRXAJR5Z0622
R9276	CHIP RES.(1608) 1/10W J 47k Ω	RRXAJR5Z0473
R9277	CHIP RES.(1608) 1/10W J 47k Ω	RRXAJR5Z0473
R9278	CHIP RES.(1608) 1/10W J 47k Ω	RRXAJR5Z0473
R9279	CHIP RES.(1608) 1/10W J 47k Ω	RRXAJR5Z0473
R9280	CHIP RES.(1608) 1/10W J 1k Ω	RRXAJR5Z0102
R9281	CHIP RES.(1608) 1/10W F 10k Ω	RRXAFR5Z1002
R9282	CHIP RES.(1608) 1/10W F 10k Ω	RRXAFR5Z1002
R9283	CHIP RES.(1608) 1/10W F 10k Ω	RRXAFR5Z1002
R9284	CHIP RES.(1608) 1/10W F 10k Ω	RRXAFR5Z1002
R9285	CHIP RES.(1608) 1/10W J 22k Ω	RRXAJR5Z0223
R9286	CHIP RES.(1608) 1/10W J 2.2k Ω	RRXAJR5Z0222
R9316	CARBON RES. 1/4W J 2.2 Ω	RCX4JATZ02R2
R9317	CARBON RES. 1/4W J 2.2 Ω	RCX4JATZ02R2
R9318	CARBON RES. 1/4W J 2.2 Ω	RCX4JATZ02R2
R9319	CARBON RES. 1/4W J 2.2 Ω	RCX4JATZ02R2
R9320	CARBON RES. 1/4W J 2.2 Ω	RCX4JATZ02R2
R9321	CARBON RES. 1/4W J 2.2 Ω	RCX4JATZ02R2
R9322	CHIP RES.(1608) 1/10W J 10k Ω	RRXAJR5Z0103
R9325	CHIP RES.(1608) 1/10W J 1k Ω	RRXAJR5Z0102
	SWITCHES	
SW1201	TACT SWITCH SKQSAB	SST0101AL038
SW1202	TACT SWITCH SKQSAB	SST0101AL038
SW1203	TACT SWITCH SKQSAB	SST0101AL038
SW1204	TACT SWITCH SKQSAB	SST0101AL038
SW1205	TACT SWITCH SKQSAB	SST0101AL038
SW1206	TACT SWITCH SKQSAB	SST0101AL038
SW1207	TACT SWITCH SKQSAB	SST0101AL038
SW1208	TACT SWITCH SKQSAB	SST0101AL038
SW1209	TACT SWITCH SKQSAB	SST0101AL038
SW1210	TACT SWITCH SKQSAB	SST0101AL038
SW1211	TACT SWITCH SKQSAB	SST0101AL038
	MISCELLANEOUS	
BC1571	BEAD INDUCTORS FBA04HA600VB-00	LLBF00STU026
BC1602	BEAD INDUCTORS FBR07HA121TB-00	LLBF00ZTU021

Ref. No.	Description	Part No.
BC1607	PCB JUMPER D0.6-P5.0	JW5.0T
BC1610	BEAD CORE B16 RH 3.5X3X1.3	XL03003XM002
BC1611	BEAD CORE B16 RH 3.5X3X1.3	XL03003XM002
BC1736	PCB JUMPER D0.6-P5.0	JW5.0T
CF1031	CERAMIC TRAP 4.5MHz	FBE455PMR003
CF1032	CERAMIC FILTER SFSRA4M50CF00-B0	FBB455PMR004
F1601⚠	FUSE 4.00A/125V	PAGU20CAG402
FH1601	FUSE HOLDER MSF-015	XH01Z00LY001
FH1602	FUSE HOLDER MSF-015	XH01Z00LY001
JK1701	RCA JACK(YELLOW) MTJ-032-05B-20	JXRL010LY038
JK1702	RCA JACK(RED) MTJ-032-05A-21	JYRL010LY010
JK1703	RCA JACK(WHITE) MTJ-032-05B-22	JXRL010LY039
JK1730	RCA JACK MSP-241V-05 PBSN W/O	JXRL010LY085
JK1801	MINI JACK HSJ2000-01-010	JYSL010HD002
JK2501⚠	CRT SOCKET ISMS02S	JSCC220PK003
PS1601⚠	THERMISTOR ZPB45BL7R0A	QNZZ45BL7R0A
RS1201	REMOCON RECEIVE UNIT PIC-37042SR	USESJRSKK034
SA1601⚠	SURGE ABSORBER 470V+-10PER	NVQZ10D471KB
SF1001	SAW FILTER SAFHM45M7VAAZ00B03	FBB456PMR010
SG1601⚠	GAP. FNR-G3.10D	FAZ000LD6005
T1571⚠	FLYBACK TRANSFORMER JF0501-3101B	LTF00CPXB039
T1572	H0RIZONTAL DRIVE TRANS LP2-005	LTH00CPA5005
T1601⚠	SWITCHING TRANS 5717	LTT00CPKT183
TB4	HEAT SINK PKK T8100UA	1EM320174
TB5	HEAT SINK PKD T8100UA	1EM420625
TB8	HEAT SINK PKM T8100UA	1EM420683
TL2	SCREW B-TIGHT D3X8 BIND HEAD+	GBMB3080
TP1304	PCB JUMPER D0.6-P5.0	JW5.0T
TP1305	PCB JUMPER D0.6-P5.0	JW5.0T
TP1401	PCB JUMPER D0.6-P10.0	JW10.0T
TP1402	PCB JUMPER D0.6-P10.0	JW10.0T
TP1403	PCB JUMPER D0.6-P10.0	JW10.0T
TP1404	PCB JUMPER D0.6-P10.0	JW10.0T
TP1405	PCB JUMPER D0.6-P7.5	JW7.5T
TP1501	PCB JUMPER D0.6-P7.5	JW7.5T
TP1502	PCB JUMPER D0.6-P5.0	JW5.0T
TP1503	PCB JUMPER D0.6-P5.0	JW5.0T
TP1731	PCB JUMPER D0.6-P7.5	JW7.5T
TP1732	PCB JUMPER D0.6-P7.5	JW7.5T
TP1733	PCB JUMPER D0.6-P7.5	JW7.5T
TP1734	PCB JUMPER D0.6-P7.5	JW7.5T
TU1001	TUNER UNIT TEFH9-001A	UTUNNTUAL042
VR1601⚠	CARBON P.O.T. VZ067TL1 B103 PB(F)	VRCB103HH014
W1601⚠	AC CORD A0A0280-002	WAC0162LTE03
WT1	LEAD CLAMPER 100MM	1790356
X1301	XTAL 3.579545 MHz	FXD355LLN003

CRT CBA

Ref. No.	Description	Part No.
	CRT CBA Consists of the following:	----------
	CAPACITORS	
C2501	CERAMIC CAP. B K 1000pF/2KV	CCD3DKP0B102
C2511	CHIP CERAMIC CAP. B K 390pF/50V	CHD1JK30B391
C2521	CHIP CERAMIC CAP. B K 390pF/50V	CHD1JK30B391
C2531A	CHIP CERAMIC CAP. B K 470pF/50V	CHD1JK30B471
	CONNECTOR	
CN2505	CONNECTOR PIN 1P RT-01N-2.3A	1730688
	COIL	
L2501	PCB JUMPER D0.6-P5.0	JW5.0T
	TRANSISTORS	
Q2511	TRANSISTOR 2SC2482 TPE6	QQSZ02SC2482

Ref. No.	Description	Part No.
Q2521	TRANSISTOR 2SC2482 TPE6	QQSZ02SC2482
Q2531	TRANSISTOR 2SC2482 TPE6	QQSZ02SC2482
RESISTORS		
R2510⚠	METAL OXIDE FILM RES. 1W J 15k Ω	RN01153ZU001
R2511	CHIP RES.(1608) 1/10W J 10 Ω	RRXAJR5Z0100
R2512	CARBON RES. 1/4W J 5.6k Ω	RCX4JATZ0562
R2515	CARBON RES. 1/4W J 560 Ω	RCX4JATZ0561
R2516	CARBON RES. 1/4W J 1.5k Ω	RCX4JATZ0152
R2517	CARBON RES. 1/4W J 1.5k Ω	RCX4JATZ0152
R2520⚠	METAL OXIDE FILM RES. 1W J 15k Ω	RN01153ZU001
R2521	CHIP RES.(1608) 1/10W J 10 Ω	RRXAJR5Z0100
R2522	CARBON RES. 1/4W J 5.6k Ω	RCX4JATZ0562
R2525	CARBON RES. 1/4W J 560 Ω	RCX4JATZ0561
R2526	CARBON RES. 1/4W J 1.5k Ω	RCX4JATZ0152
R2527	CARBON RES. 1/4W J 1.5k Ω	RCX4JATZ0152
R2530⚠	METAL OXIDE FILM RES. 1W J 15k Ω	RN01153ZU001
R2531	CHIP RES.(1608) 1/10W J 10 Ω	RRXAJR5Z0100
R2532	CARBON RES. 1/4W J 5.6k Ω	RCX4JATZ0562
R2535	CARBON RES. 1/4W J 560 Ω	RCX4JATZ0561
R2536	CARBON RES. 1/4W J 1.5k Ω	RCX4JATZ0152
R2537	CARBON RES. 1/4W J 1.5k Ω	RCX4JATZ0152
MISCELLANEOUS		
CL2501	LEAD WIRE 8P 270MM	WX1T8001-001